KEMENTERIAN PENDIDIKAN MALAYSIA

POLITEKNIK MALAYSIA PORT DICKSON

A MALAYSIAN POLYTHECNIC APPROACH

ELECTRONIC CIRCUIT

Concise Notes

2nd Edition

BY
NUR ZAKIAH HANI KAMAROLZAMAN
MASNORA SEPIKUN
MUHAMMAD KHAIRI AZIZ

TK7867
.N87
2019

TK7867 .N87 2019

0000029318
Nur Zakiah Hani Kamarolzaman
Electronic circuit concise notes / Nur Zakiah Hani
Kamarolzaman, Masnora Sepikun, Muhammad Khairi Aziz.

00029318

ELECTRONIC CIRCUIT CONCISE NOTES

2nd EDITION

PERPUSTAKAAN
POLITEKNIK PORT DICKSON

PESANAN KERAJAAN	-
NO. INVOIS	-
PEMBEKAL	-
NO. PANGGILAN	TK7864 .I84 2019

BUKU INI DISUMBANGKAN OLEH
JPG POLITEKNIK PORT DICKSON

@ Port Dickson Polytechnic

Second Edition 2019 (July)

Copyright of Port Dickson Polytechnic

All Right Reserved

Publisher:

Politeknik Port Dickson,

KM 14, Jalan Pantai,

71050 Si Rusa,

Negeri Sembilan.

"Electronic Circuit – Concise Notes (2nd Edition)" as a tool to help students doing more exercise to enhance their knowledge in Electronic Circuit course. It's also can help lecturer to monitor the student's performance in this course.

Perpustakaan Negara Malaysia Cataloguing-in-Publication Data

Nur Zakiah Hani Bte Kamarolzaman

ISBN: 978-967-5677-72-4

Printed by:

Print Expert Sdn Bhd

No 20, Jalan Bunga Tanjung 2/16,

Seksyen 2, 40000 Shah Alam,

Selangor, Malaysia

A special thanks to our families and students.
Also to our teammates Sharifah Noriza Syed Ibrahim, Mirdaa Maznor,
Azilah Asri, Alizawati Mat Zim, Amiza Yaman and Ridzuan.

PREFACE

"Electronic Circuit – Concise Notes (2nd Edition)" is our special present for students who are studying Electronic Circuit course as well as all the lecturers involve. It is a tool with a CONCISE concept, bringing the students to easy reading, easy understanding and easy mastering the Electronic Circuit course. Each chapter is systematically formulated to produce this concise note. There are six chapters covered in this book which is Power Supply, Oscillator, Operational Amplifier, Timer, Filter and Analog to Digital or Digital to Analog Converter. In this 2nd Edition of the Electronic Concise Book will present more info with more supporting diagrams to help students more understanding of every chapter. Finally, we hope this book will enhance and reinforce the understanding of the students in mastering the Electronic Circuit course.

Dr. Nur Zakiah Hani Binti Prof Madya Dr. Kamarolzaman
Port Dickson Polytechnic 2019

TABLE OF CONTENTS

CHAPTER 1 1

DC POWER SUPPLY 1

1.1 INTRODUCTION 1

1.2 TRANSFORMER 2

1.3 RECTIFIER 3

1.4 FILTER 9

1.5 VOLTAGE REGULATOR 13

1.6 VOLTAGE DIVIDER 15

1.7 PRACTICES 16

CHAPTER 2 19

OSCILLATOR 19

2.1 INTRODUCTION 19

2.2 COLPITTS OSCILLATOR 21

2.3 HARTLEY OSCILLATOR 23

2.4 PHASE SHIFT OSCILLATOR 24

2.5 CRYSTALL OSCILLATOR 25

2.6 ARMSTRONG OSCILLATOR 27

2.7 PRACTICES 28

CHAPTER 3 31

OPERATIONAL AMPLIFIER 31

3.1 INTRODUCTION 31

3.2 STAGES IN OPERATIONAL AMPLIFIER 33

3.3 CHARACTERISTICS OF IDEAL OPERATIONAL AMPLIFIER 38

3.4 COMMON-MODE REJECTION RATIO (CMRR) 39

3.5 OPERATIONAL AMPLIFIER MODES OF OPERATION 40

3.6 INVERTING AMPLIFIER 42

3.7 NON-INVERTING AMPLIFIER 43
3.8 SUMMING AMPLIFIER 44
3.9 DIFFERENTIATOR AMPLIFIER 45
3.10 INTEGRATOR AMPLIFIER 47
3.11 DIFFERENTIAL AMPLIFIER 48
3.12 PRACTICES 49
CHAPTER 4 51
TIMER 51
4.1 INTRODUCTION 51
4.2 MONOSTABLE MODE 52
4.3 ASTABLE MODE 54
4.4 BISTABLE MODE 57
4.5 SCHMITT TRIGGER - BUFFER 58
4.6 PRACTICE 62
CHAPTER 5 65
FILTER 65
5.1 INTRODUCTION 65
5.2 PASSIVE FILTER 69
5.3 ACTIVE FILTER 78
5.4 ADVANTAGES OF ACTIVE FILTERS OVER PASSIVE FILTERS 89
5.5 PRACTICES 89
CHAPTER 6 92
DA / AD CONVERTER 92
6.1 INTRODUCTION 92
6.2 DIGITAL TO ANALOG CONVERTER 93
6.3 ANALOG TO DIGITAL CONVERTER 100
6.4 PRACTICES 105

CHAPTER 1

DC POWER SUPPLY

1.1 INTRODUCTION

DC Power Supply is a component that supplies DC power to at least one electric load. It is produced by a set of circuit. Power supplies range from a simple to complex depending on the requirements of the systems. Every power supply must obtain the energy it supplies to its load as well as any energy it consumes while performing that task, from an energy source. Depending on its design, a power supply may obtain energy from an electrical energy transmission system.

Common examples of this include power supplies that convert AC line voltage (240V, 50Hz for Malaysia) to Direct Current Voltage. Power supply also may obtain energy from batteries fuel cells, electromechanical systems (example: generators, alternators), a solar power, hydro power and many more. DC Power Supply circuit is a must have circuit for every electrical appliance in our house like computers, washing machine, refrigerator and etc. But, why it is so important? Because, most of the electronic components in the circuit are using a DC supply to operate. It is simple right! But how DC Power Supply can convert an AC voltage to the DC voltage? It must not a magic. Actually DC power supply circuit consists of FIVE parts of circuit, which are transformer, rectifier, filter, voltage regulator and voltage divider. Below is the block diagram of the DC power supply.

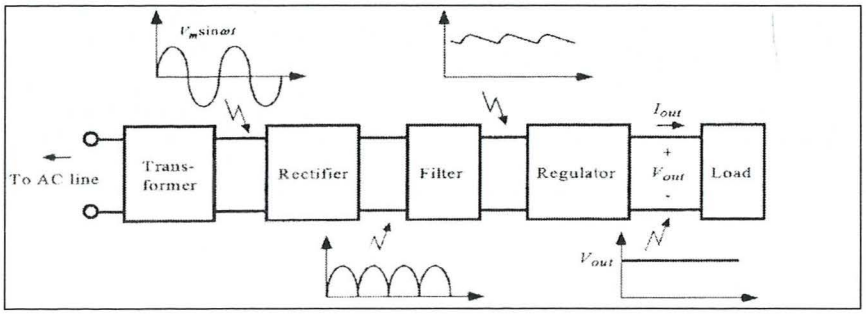

Figure 1.1: Block Diagram of Power Supply

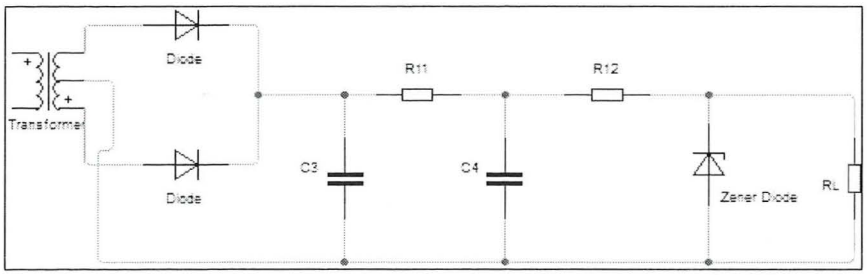

Figure 1.2: Circuit of Power Supply

1.2 TRANSFORMER

A transformer is a part of power supply circuit, by the principles of electromagnetic induction, transfers electrical energy from one electric circuit to another, without changing the frequency. The energy transfer usually takes place with a change of voltage and current. The purpose of transformers are:

- Increases or decreases AC voltage
- Used to meet a wide variety of needs.
- Transforming electrical power from one type to another.

There are many different types of transformers used today, such as:

- Power Transformers
- Auto Transformers
- Distribution Transformers
- Instrument Transformers
- Isolation Transformers
- Potential Transformers
- Current Transformers

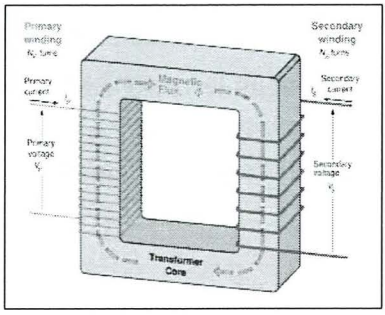

Figure 1.3: Transformer

1.3 RECTIFIER

Rectifier circuit is needed after transformer to change an alternating current to direct current by rectification. It is because most electronic circuits need direct current. Rectification is the conversion of alternating current (AC) to direct current (DC) using a diode or multiple diodes. There are **THREE (3)** types of rectifier:

- Half-wave rectifier
- Full-wave rectifier
- Bridge rectifier

1.3.1 Half wave rectifier

- In half wave rectification, either the positive or negative half of the AC wave is passed, while the other half is blocked.
- Because only one half of the input waveform reaches the output, it is very inefficient if used for power transfer.
- Half-wave rectification can be achieved with a **single diode** in a one-phase supply.

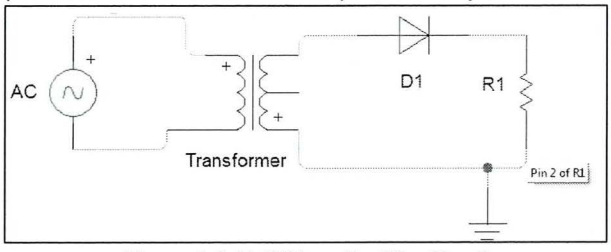

Figure 1.4: Half Wave Rectifier Circuit

- **When Positive Cycle:**

  During the positive cycle of the input signal, the diode D forward bias.

  D acts as **a close switch** and the **current can pass** through. Voltage drop on the RL is equal to the magnitude of the positive cycle if we ignore the input signal voltage drop on the diode.

  The value of output voltage same as input voltage.

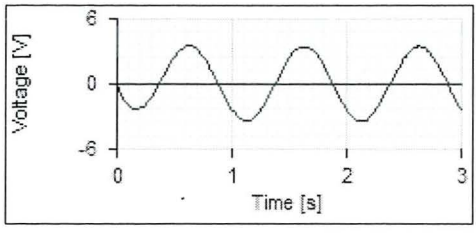

Figure 1.5: Input Waveform

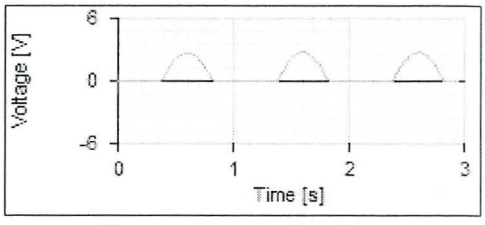

Figure 1.6: Output Waveform

- **When Negative Cycle:**

  During the negative cycle of input signal, the diode D reverse biased. D acts as **an open switch** so current cannot pass through.

  Voltage drop in the RL during the negative cycle is **empty**.

  When we connect the oscilloscope across the RL we will find the output waveform

- **Input and Output Waveform**

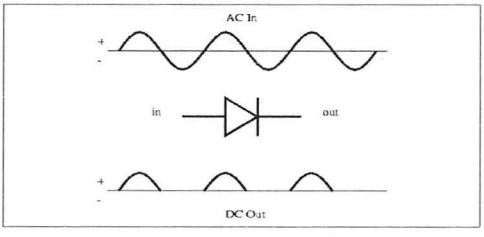

  - Input of the rectifier circuit is a sinusoidal AC voltage and the output of the rectifier is a pulsating DC voltage.
  - A half-wave rectifier is a circuit that **allows only one half-cycle of the AC voltage** waveform to be applied to the load, resulting in one non-alternating polarity across it.
  - The resulting DC delivered to the load "pulsates" significantly.

- **Output Voltage**
  - Output voltage for half-wave rectifier circuit current produced only positive cycle.
  - Since the current through the diode and the diode **voltage drop is 0.7V** (assuming silicon diode), the output voltage is: -

$$\mathbf{Vout = Vin - 0.7V}$$

- **Output Frequency**
  - The frequency output signal is equal to the input frequency.

$$\mathbf{Fout = Fin}$$

1.3.2 Center Tapped Full Wave Rectifier

A *full-wave rectifier* converts the whole of the input waveform to one of constant polarity (positive or negative) at its output. Full-wave rectification converts both polarities of the input waveform to DC (direct current), and is more efficient. However, in a circuit with a non-center tapped transformer, four diodes are required instead of the one needed for half-wave rectification. It can overcome the inefficiency of the half wave rectifier by allowing energy to be delivered to the load.

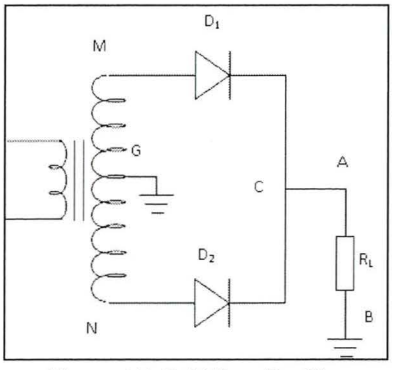

Figure 1.7: Full Wave Rectifier

- **When Positive Cycle:**

When the voltage AC provided on the circuit, the end of **M and N** on the transformer secondary will be positive and negative in turn. When the input voltage positive cycle is inserted, the terminal M is positive, G be the ability to empty (the earth) and N is negative. Diodes D1 to be forward biased while diode D2 to be reverse biased. Current flows along the **M, D1, C, A, B, G. A** positive cycle of the wave will be produced at the load, RL.

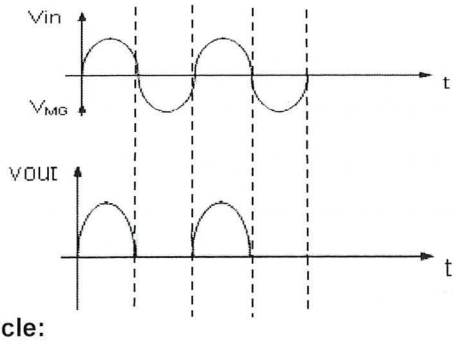

Input Waveform

Output Waveform

- **When Negative Cycle:**

When the input voltage negative cycle is inserted, the terminal M is negative, G be the ability to empty (the earth) and N be positive. Diode D2 become forward biased diode D1 while the reverse bias. Current flows along the **N, D2, C, A, B, G**. Since the current flowing through the load RL is equal to the current flowing through the load RL when the positive cycle, we can form the same wavelength.

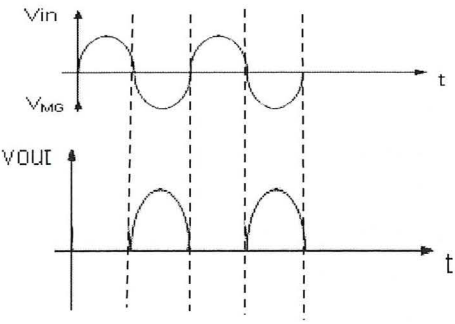

Input Waveform

Output Waveform

After all, output of full wave rectifier will be:

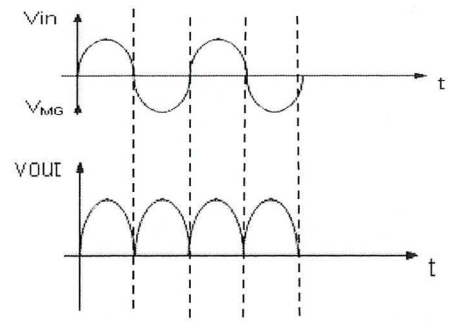

Input Waveform

Output Waveform

- **Output Voltage**

Output voltage of full wave rectifier circuit resulting in two cycles. Since in a cycle of current through a diode and the voltage drop on the diode is 0.7V (assuming silicon diode), the output voltage is:

$$\text{Vout} = V_{M\text{-}G} - 0.7V$$

- **Output Frequency**

Output signal frequency is **twice** the input frequency. **Fout = 2 Fin**

1.3.3 Bridge Rectifier

A Bridge rectifier is an arrangement of four diodes in a bridge circuit configuration. It is provides the same polarity of output for either polarity of input.

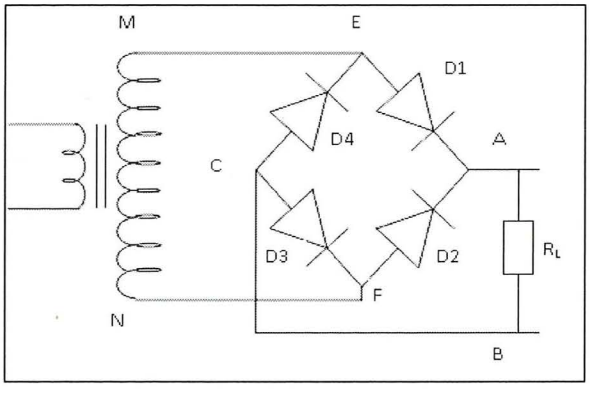

Figure 1.8: Bridge Rectifier Circuit

- **When Positive Cycle :**

When the voltage AC provided on the circuit, the end of M and N on the transformer secondary will be positive and negative in turn. When the input voltage positive cycle is inserted, the terminal M and N be positive to negative. Diodes **D1 and D3** to the **forward biased**, while diode **D2 and D4 to reverse bias**. Current flows along the **M, E, A, B, C, F N. A** positive cycle of the wave will be produced at the load.

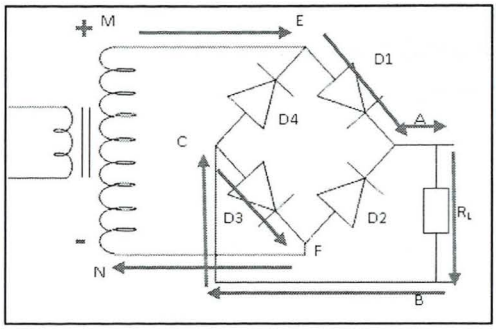

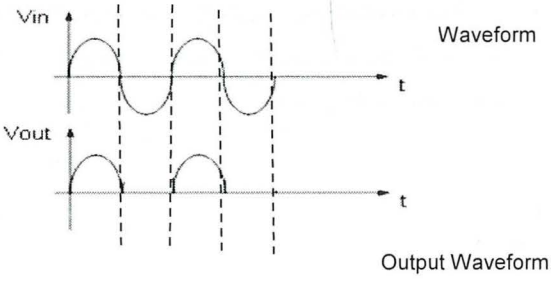

- **When Negative Cycle:**

When the input voltage negative cycle is inserted, the terminal M is negative and N be positive. Diode D2 and D4 to the forward biased, while diode D1 and D3 the reverse biased. Current flows along the **N, F, A, B, C, E, M**. Since the current flowing through the load RL is equal to the current flowing through the load RL when the positive cycle, we can form the same wavelength.

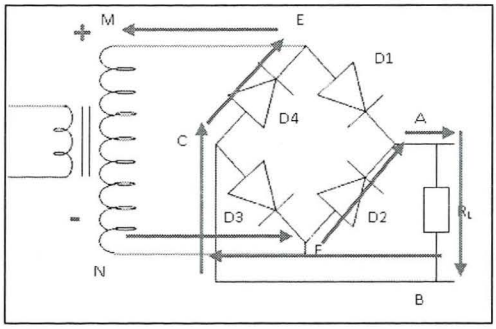

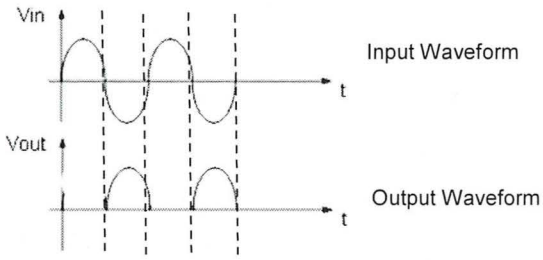

After all, output of bridge rectifier will be:

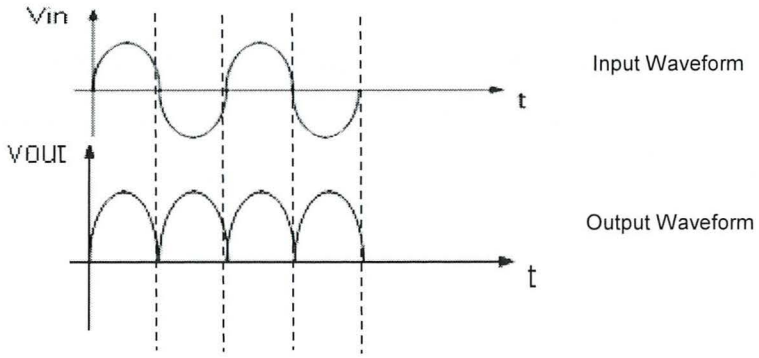

- **Output Voltage**

Output voltage of a Bridge Rectifier circuit resulting in two cycles. Since in a cycle of current through the two diodes and the voltage drop on the diode is 1.4V (assuming silicon diode), the output voltage is;

$$\mathbf{Vout = V_{M\text{-}N} - 1.4V}$$

- **Output Frequency**

The output frequency of Bridge Rectifier is **twice** the input frequency.

$$\mathbf{Fout = 2\ Fin}$$

1.4 FILTER

The capacitors in filter circuit will charging and discharging, and it will cause the pulsating DC output smoothen after rectification. So that a nearly constant DC voltage is supplied to the load.

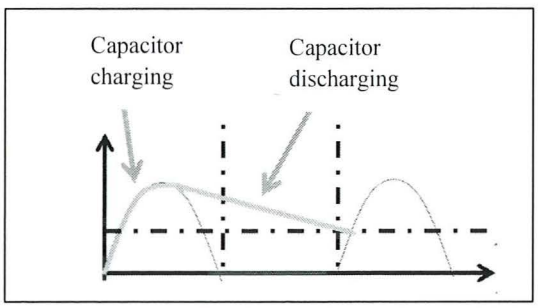

Figure 1.9: Capacitor Charging and Discharging

Charging: Initial charging of the capacitor with forward biased diode will happen only when power is turned on.

Discharging: The capacitor discharge through RL after peak of positive alternation when the diode is reverse biased.

The variation in the capacitor quickly charging and discharging is called **Ripple Voltage** and the output of the filter circuit is a **Ripple DC**.

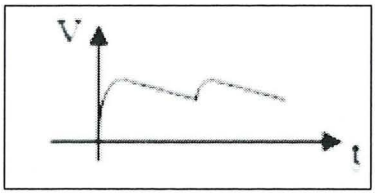

Figure 1.10: Ripple DC Voltage Waveform

The ripple voltage can be measure as figure below:

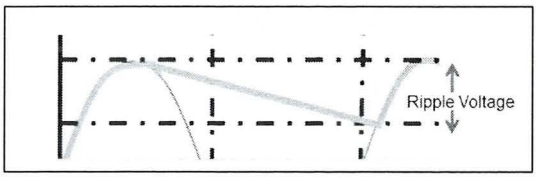

Figure 1.11: Ripple DC Voltage

Ripple is the residual periodic variation of the DC voltage within a power supply which has been derived from an alternating current (AC) source.

Ripple is undesirable, thus the smaller the ripple, the better the filtering action.

3 types of filter:

- RC Filter Circuit or Phi RC Filter
- LC Filter
- Phi LC Filter

00029318

1.4.1 RC Filter Circuit or Phi RC Filter

- The output voltage is reduced due to the voltage drop across R1 and the higher the current, the greater this voltage drop.
- This filter is effective in high voltage, low current applications. As in choke input filters, the capacitor input filters shown may be multiplied.
- The choice of a filter for a particular use is a design problem, but the purpose and operation of filters should be understood by all, because of their importance to the proper operation of equipment following the power supply.

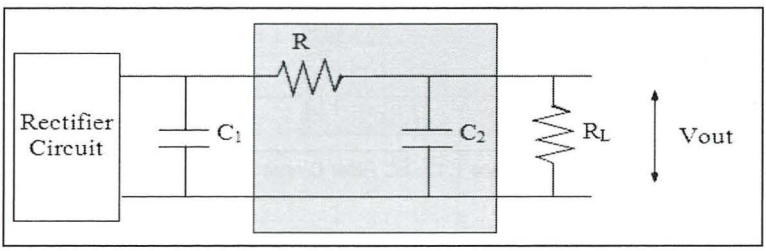

Figure 1.12: RC Filter Circuit

- Advantages of the RC Filter circuit:
  - A popular filter circuit for power supply.
  - Low cost
  - Small size
  - Less weight
  - Good characteristics
  - Useful for load up to 50mA as in transistor radio battery eliminators.

1.4.2 LC Filter

- In the inductor filter, the ripple factor is directly proportional to the load resistance.
- While in a capacitor filter, it is varying inversely with the load resistance.
- Hence if we combine the inductor filter with the capacitor, the ripple factor will become almost independent of the load filter.

Perpustakaan Politeknik Port Dickson

- In this circuit, it offers high resistance to AC components and allows DC component to flow through the load.
- The capacitor across the load is connected in parallel which filter out any AC component flowing through the choke,
- In this way, the ripples are rectified and a smooth DC is provided through the load.

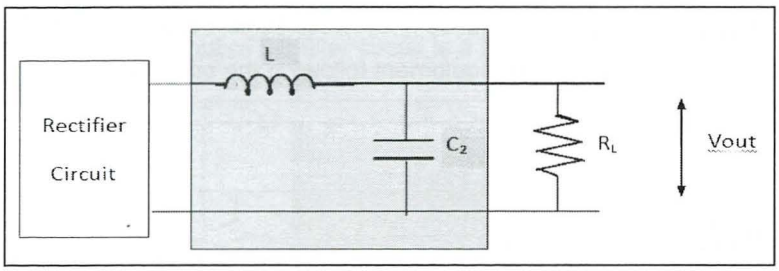

Figure 1.13: LC Filter Circuit

1.4.3 Phi LC Filter

- Consists of one inductor and 2 capacitors.
- The capacitor C1, is selected to offer very low reactance to the repel frequency hence major parts of filtering is done by C1.
- Most of the remaining repels are removed by the combining action L and C2.
- Better than LC filter.
- Need high pulse of current if load current is large.
- This filter is used for the low current equipment's.

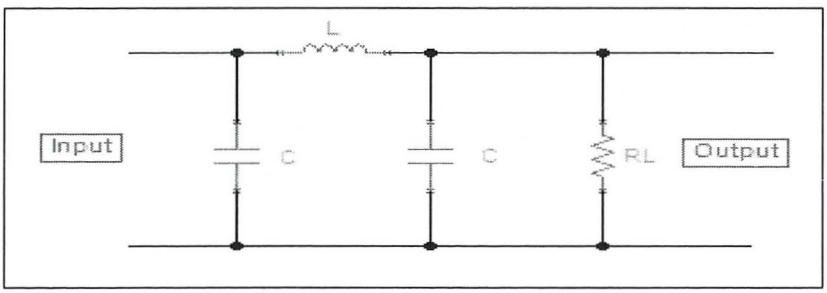

Figure 1.14: Phi LC Filter Circuit

1.5 VOLTAGE REGULATOR

A voltage regulator's aim is to **maintain the voltage comparatively close to a required value in a circuit.** Voltage regulators are one of the most popular electronic components, as a power supply often generates raw power that would otherwise harm one of the circuit's parts. Depending on their specific implementation, voltage regulators have a range of specific tasks.

1.5.1 Voltage regulator using Zener Diode

Consist of a Zener diode

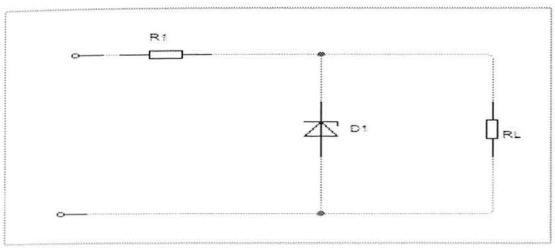

Figure 1.15: Voltage Regulator using Zener Diode

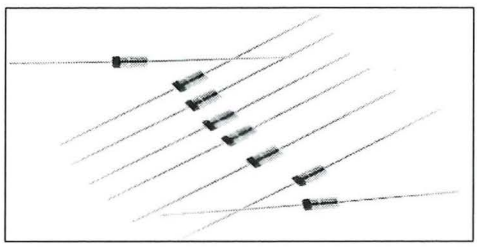

Figure 1.16: Zener Diode

The Zener diode can limit the voltage across it due to its operating region (refer I-V characteristic below).

- The zener diode diodes have a very low reverse breakdown voltage.
- Its operation can be summarized by below rules;

  When Vin < Vz ; the diode will act as an **open circuit**, I=0

  When Vin > Vz ; the diode will act as an **short circuit**, Vo = Vz

- **Advantages;**
  - Simple
  - Easy to build
  - Inexpensive
- **Disadvantages:**
  - The source voltage must be slightly higher than the Zener voltage in order to keep the Zener diode in reverse breakdown. Otherwise, the output voltage will simply follow the input voltage.

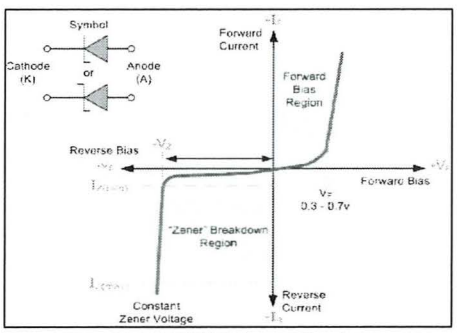

Figure 1.17: Zener Region

1.5.2 Voltage regulator using Serial Transistor

- Consist of transistor and zener diode
- Transistors connected in series with the load will control the input voltage to output (control element).
- Output voltage sampled by a circuit which supplies a feedback voltage and compared to the reference voltage (provide by zener diode).
- Since Q1 is an npn transistor, Vo found as;

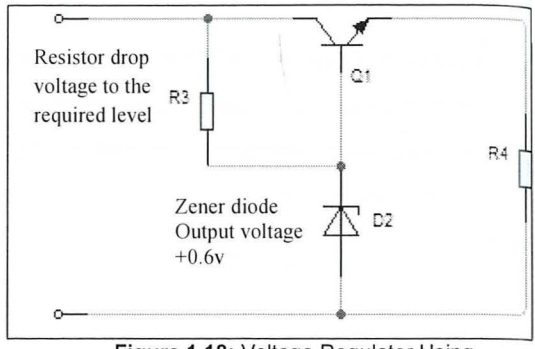

Figure 1.18: Voltage Regulator Using

$$V_{BE} = V_z - V_o$$

- The response of the transistor to a change in load resistance as follow;
  - If load resistance increase, load voltage also increases.
  - Since the zener voltage is constant, the increase in V_o causes V_{BE} to decrease.
  - The decrease in V_{BE} reduces conduction through the pass transistor, so load current decreases.
  - This offsets the increase in load resistance, and a relatively constant load voltage is maintained.

1.5.3 Voltage regulator using Integrated Circuit (IC)

- The circuit consists of Integrated circuit and capacitors.
- The IC voltage regulator is an integrated circuit whose basic purpose is to regulate the unregulated input voltage (definitely over a predefined range) and provide with a constant, regulated output voltage.

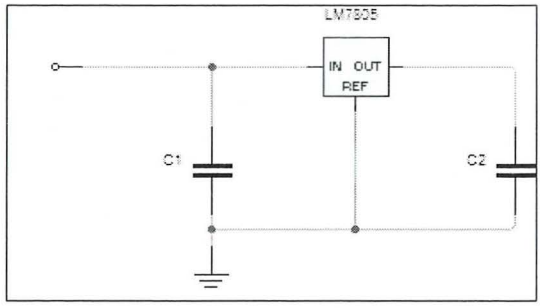

Figure 1.19: Voltage Regulator Using IC

- For example the 7805 IC was used, which provides a constant 5 volts output.
- A fixed voltage regulator can be a positive voltage regulator or a negative voltage regulator.
- A positive voltage regulator provides with constant positive output voltage. All those IC's in the 78XX series are fixed positive voltage regulators. In the IC nomenclature – 78XX; the part XX denotes the regulated output voltage the IC is designed for. Examples: - 7805, 7806, 7809 etc.

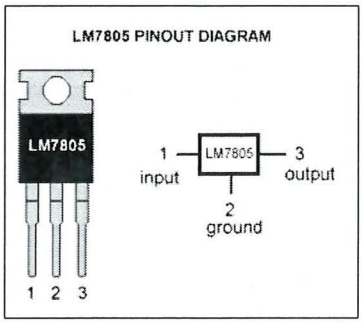

Figure 1.20: LM7805

- A negative fixed voltage regulator is same as the positive fixed voltage regulator in design, construction & operation. The only difference is in the polarity of output voltages. These IC's are designed to provide a negative output voltage. Example: - 7905, 7906 and all those IC's in the 79XX series.

1.6 VOLTAGE DIVIDER

A voltage divider is a simple circuit which turns a large voltage into a smaller one. Using just two series resistors and an input voltage, we can create an output voltage that is a fraction of the input.

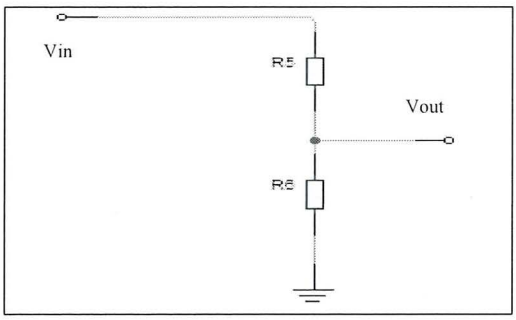

Figure 1.21: A Simple Voltage Divider Circuit

It is **used to divide the voltage into a different output voltage required** (example: TV system for example, there are more than ten different levels of circuit functions and some that require DC voltage 100V, 48V, 12V, and etc).

Types of voltage divider circuit;

- Fixed voltage divider circuit

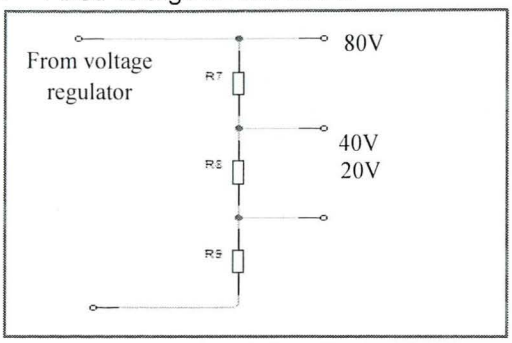

Figure 1.22: Fixed Voltage Divider Circuit

- Variable voltage divider circuit

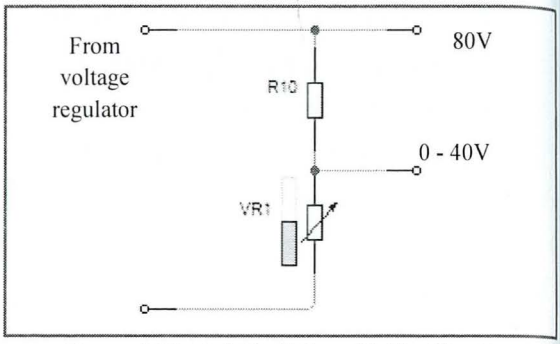

Figure 1.23: Variable Voltage Divider Circuit

Output Voltage for a Simple Voltage Divider Circuit:

$$Vout = \frac{R5}{R5 + R6} Vin$$

1.7 PRACTICES

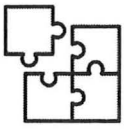

Multiple Choice Questions

1. Figure below show a block diagram of a linear Direct Current (DC) power supply. State the function of X.

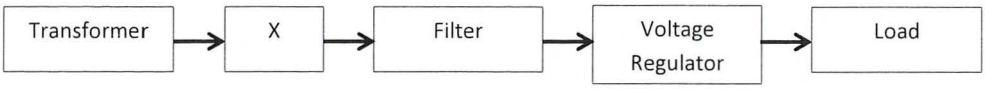

   a. Smooth out the pulsating DC voltage.
   b. Smooth out the pulsating AC voltage.
   c. Change the DC input to the pulsating AC voltage.
   d. Change the AC input to the pulsating DC voltage.

2. Choose the function of diode pairs in the bridge rectifier.
   a. The load is in series with one pair of diodes that are forward biased, while other pair is reversed biased.
   b. The load is in parallel with one pair of diodes that are forward biased, while other pair is reversed biased.
   c. The load is in series with all of diodes that are in forward biased.
   d. The load is in parallel with all of diodes that are in forward biased.

3. "This circuit is used to convert the sinusoidal AC voltage into either positive or negative pulsating DC". The statement refers to _____circuit.
   a. Filter
   b. Rectifier
   c. Regulator
   d. Transformer

4. A small variation occurs in the direct current (dc) because the capacitor discharges a small amount between the positive and negative pulses. This variation is called _____.
   a. Filter
   b. Oscillator
   c. Ripple
   d. Capacitance

5. _____is the most effective way to reduce the ripple occurring after filtering.
   a. Single diode voltage regulator
   b. Zener diode voltage regulator
   c. Serial transistor voltage regulator
   d. IC voltage regulator

Structure Questions

1. State **THREE (3)** types of rectifier.
2. Explain the operation of serial transistor voltage regulator with the aid of diagram.
3. Draw the input and output waveform of the half wave rectifier.
4. Explain by using the suitable block diagram of power supply unit and label each block.
5. Draw the bridge rectifier network and explain briefly the operation of the circuit.

CHAPTER 2

OSCILLATOR

2.1 INTRODUCTION

It is an electronic source of alternating current or voltage produce sine, square or saw tooth wave shape. Electronic oscillators are **used to generate signals** in computers, wireless receivers and transmitters, and audio-frequency equipment, particularly music synthesizers. Figure 2.1 show Oscillator circuit which generates an AC output signal without requiring any externally applied input signal. It keeps producing an output signal as long the DC power source is connected.

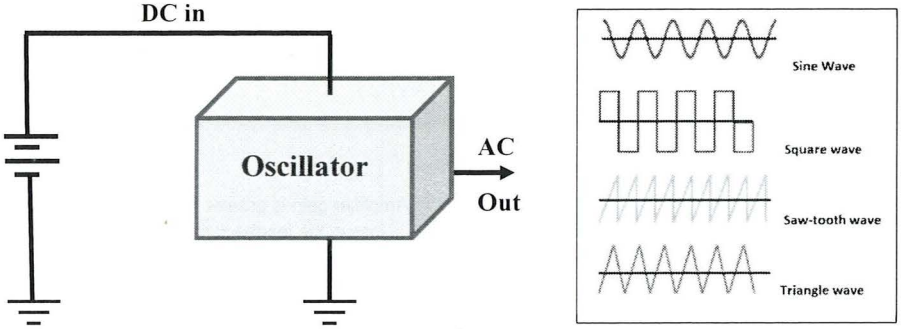

Figure 2.1: Oscillator Basic

Based on Figure 2.1 the only input to the oscillator is a DC power supply and the output is AC. Most oscillators are amplifier with feedback as shown in Figure 2.2. The feedback circuit uses component such as resistor, capacitor, inductor or transformers to connect the input of the amplifier to the output of the amplifier. The feedback circuit also known as Tank circuit.

Figure 2.2 is the block diagram to show how the requirement apply in the oscillator circuit to sustained oscillation. For example when someone adjust the volume control too high on a PA system. Cause the sound from the loudspeakers enters the microphone. Even turning down the volume control and stop the oscillating in feedback path, loss in feedback path still happened. To overcome the loss in the feedback path, the amplifier gain must be greater than the loss in the feedback path.

The other criterion is the signal feedback to the input on amplifier must be 0° or 360° in phase with the input. In phase feedback also called positive feedback or regenerate feedback. From the Figure 2.2 show the tank circuit in feedback path is phase shift 180°. While the amplifier normally out of phase and also phase shift 180°. The total phase shift is 180° + 180° equal 360° which is same phase as 0°. According to all these requirements, it was produced a Barkhaunsen Stability Criterion.

Barkhaunsen Stability Criterion

Two conditions are required for a sustained state of oscillation, which are;

a. The phase shift around the feedback loop must be 0°(or 360°) in phase.
b. The voltage gain, A*cl* around the closed feedback loop must equal to 1 (unity). The voltage gain around the closed feedback loop (A*cl*) is the product of the amplifier gain (Av) and the attenuation (β) of the feedback circuit.

$$Acl = (Av)(\beta)$$

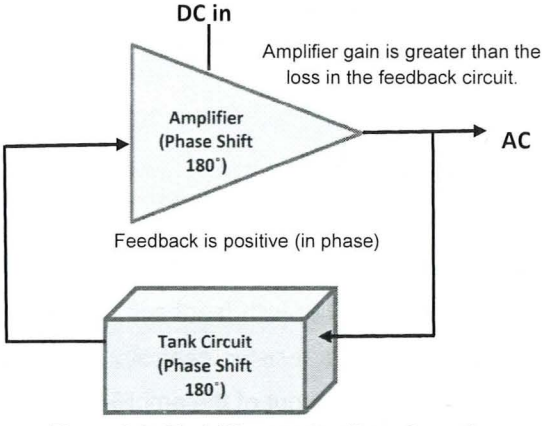

Figure 2.2: Block Diagram Oscillator Operation

Oscillators are widely used in most communications systems as well as in digital systems, including computers, to generate required frequencies are found in many types of test instruments like those used in laboratory. A sinusoidal oscillator produces a sine-wave output signal. Sine-wave generators produce signals ranging from low audio frequencies to ultrahigh radio and microwave frequencies. Many low-frequency generators use resistors and capacitors to form their frequency-determining networks and are referred to as **RC OSCILLATORS**. They are widely used in the audio-frequency range.

Another type of sine-wave generator uses inductors and capacitors for its frequency-determining network. This type is known as the **LC OSCILLATOR**. LC oscillators, which use tank circuits, are commonly used for the higher radio frequencies. They are not suitable for use as extremely low-frequency oscillators because the inductors and capacitors would be large in size, heavy, and costly to manufacture. A third type of sine-wave generator is the **CRYSTAL-CONTROLLED OSCILLATOR**. The crystal-controlled oscillator provides excellent frequency stability and is used from the middle of the audio range through the radio frequency range.

2.2 COLPITTS OSCILLATOR

In the circuit in Figure 2.3 resistors R1 and R2 gives a voltage divider biasing to the transistor. Resistor R3 limits the collector current of the transistor. C3 is the input DC decoupling capacitor while C4 is the output decoupling capacitor. R4 is the emitter resistor and

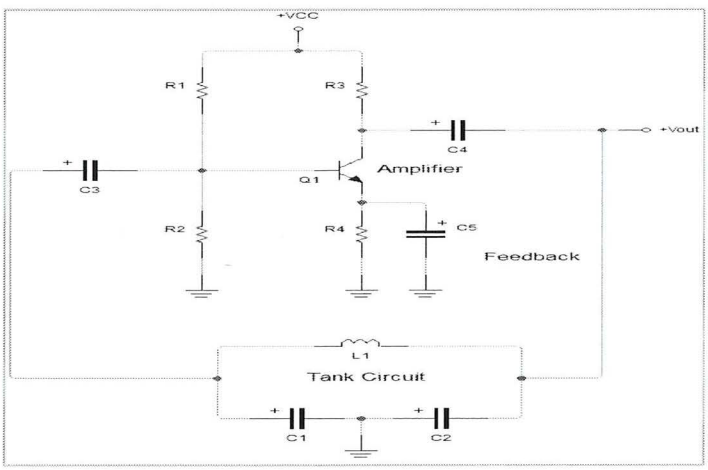

Figure 2.3: Colpitts Oscillator Circuit

it's meant for thermal stability. C5 is the emitter by-pass capacitor. Job of the emitter by-pass capacitor is to by-pass the amplified AC signals from dropping across R4. The emitter by-pass capacitor is not there, the amplified AC signal will drop across R4 and it will alter the DC biasing conditions of the transistor and the result will be reduced gain. Capacitors C1, C2 and inductor L1 forms the tank circuit. Feedback to the base of transistor is taken from the junction of Capacitor C2 and inductor L1 in the tank circuit.

When power supply is switched ON, capacitors C1 and C2 starts charging. When they are fully charged they starts discharging through the inductor L1. When the capacitors are fully discharged, the electrostatic energy stored in the capacitors gets transferred to the inductor as magnetic flux. The inductor starts discharging and capacitors gets charged again. This transfer of energy back and forth between capacitors and inductor is the basis of oscillation. Voltage across C2 is phase opposite to that of the voltage across the C1 and it is the voltage across C2 that is fed back to the transistor. The feedback signal at the base of transistor appears in the amplified form across the collector and emitter of the transistor.

The energy lost in the tank circuit is compensated by the transistor and the oscillations are sustained. The tank circuit produces 180° phase shift and the transistor itself produces another 180° phase shift. That means the input and output are in phase and it is a necessary condition of positive feedback for maintaining sustained oscillations. Colpitts oscillator is generally used in RF applications and the typical operating range is 20 KHz to 300MHz.

According to the Colpitts Oscillator circuit, two capacitors and one inductor determine the frequency of oscillation. The feedback needed for oscillation is taken from a voltage divider made by the two capacitors. The Colpitts Oscillator has fairly good frequency stability, is easy to tune, and can be used for a wide range of frequencies. The large value of split capacitance is in parallel with the junctions and minimizes the effect on frequency stability.

The frequency of oscillations for a Colpitts Oscillator is determined by the resonant frequency of the LC tank circuit and is given as:

$$f = \frac{1}{2\pi\sqrt{LC_T}}$$

where C_T is the capacitance of C1 and C2 connected in series and is given as:.

$$\frac{1}{C_T} = \frac{1}{C_1} + \frac{1}{C_2} \quad \text{or} \quad C_T = \frac{C_1 \times C_2}{C_1 + C_2}$$

2.3 HARTLEY OSCILLATOR

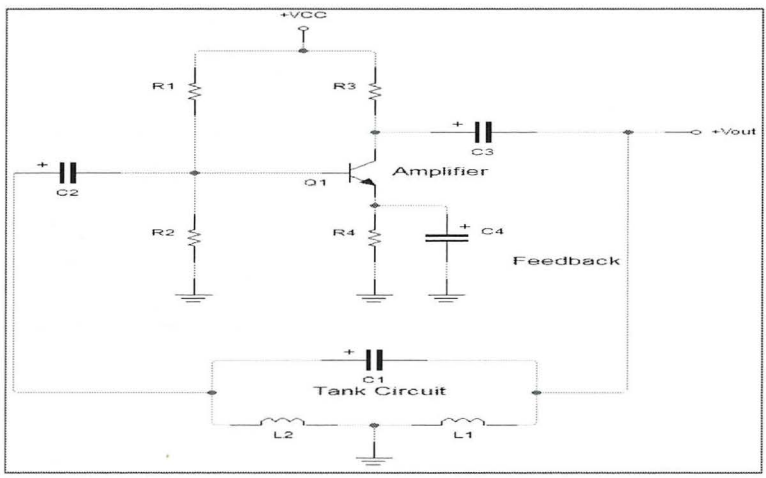

Figure 2.4 : Hartley Oscillator Circuit

Hartley Oscillator circuit is more similar to the Colpitts oscillator, but using Tapped Inductance. Just look at the Figure 2.4, transistors and resistors R1, R2, R3 and R4 are combination of amplifier circuits (Common Emitter Amplifier Voltage Dividers Biasing Technic). Capacitors C3 and C4 are used to shorting AC signal to ground. Amplifier will provide different phase of the output signal 180°. LC circuit in the feedback loop will produce a phase shift of 180°. So the feedback voltage will be in phase with the input voltage of the transistor.

Formula for the Resonance Frequency of the circuit are:

$$fr = \frac{1}{2\pi\sqrt{CL_T}}$$

Since the inductor in the tank circuit is connected in series, then;

$$L_T = L_1 + L_2$$

2.4 PHASE SHIFT OSCILLATOR

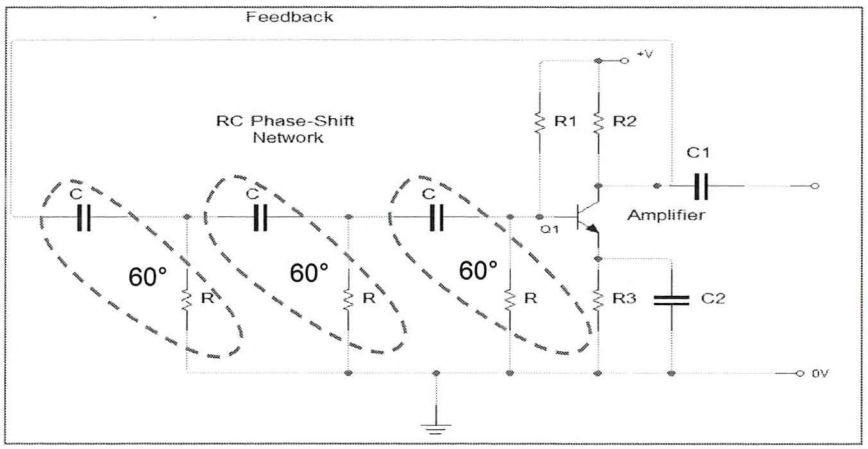

Figure 2.5 : Phase Shift RC Oscillator Circuit

The output signal from the amplifier phase shift 180° out from the input signal. To generate a positive feedback signal, the output signal phase shifted by 180° should be in phase with the input. RC network produces a phase shift of 180° which each RC network will shift phase by 60° as shown in Figure 2.5.

Frequency resonant for the RC circuit given by equation below:

$$fr = \frac{1}{2\pi RC\sqrt{2xN}}$$

Where:

f = the Output Frequency in Hertz

R = the Resistance in Ohms

C = the Capacitance in Farads

N = the number of RC stages (in our example N = 3)

2.5 CRYSTALL OSCILLATOR

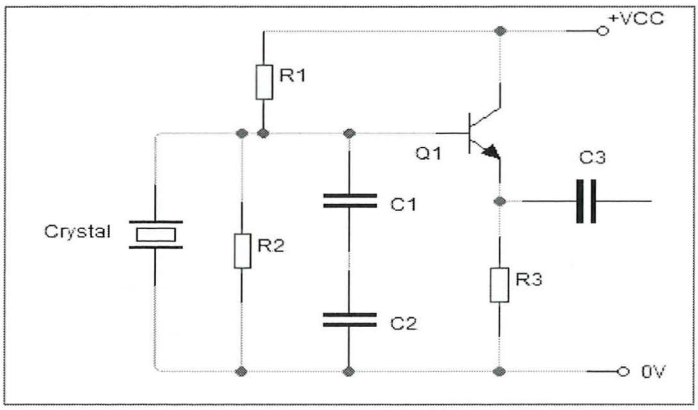

Figure 2.6 : Crystal Oscillator Circuit

Crystal oscillator in Figure 2.6 is the most stable and precisely using a piezoelectric crystal in a feedback circuit. This circuit is used to stabilize the frequency or to provide constant frequency output. When the AC voltage applied to the crystals, the mechanical vibrations occur and these vibrations natural with the resonant frequencies that depend on the thickness of the crystal. To obtain a high frequency crystal should be thinner.

Electrical properties of crystals can be expressed with resonant circuit in Figure 2.8. Ls Inductance electrical equivalent of mass represents the crystal. Capacitance, Cs

represents the elasticity of crystals, represents the friction resistance of Rs in the crystal structure. Cp represents the capacitance capacitor containers loaded crystal.

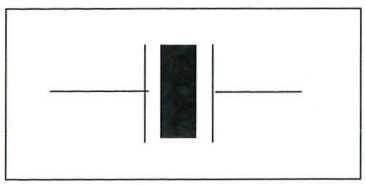

Figure 2.7: Crystal Symbol

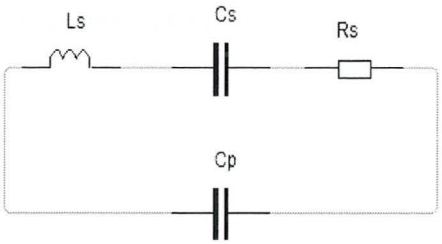

Figure 2.8: Electrical Equivalent Circuit

It has two resonant frequencies. The first frequency generated by the series circuit Rs-Ls-Cs. The second occurs when the frequency components of the same series reactance, Cp.

Resonant Frequency:

- Series Resonance:

$$f_1 = \frac{1}{2\pi\sqrt{L_S C_S}}$$

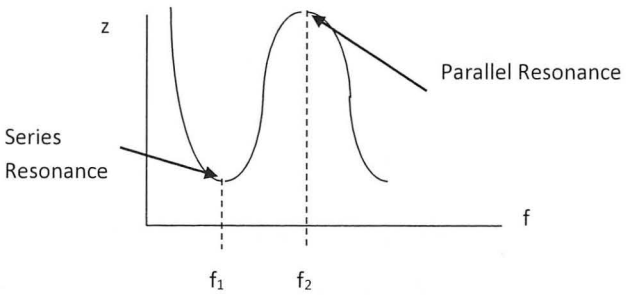

- Resonance Parallel :

$$f_2 = \frac{1}{2\pi\sqrt{L_S C}}$$

$$C = \frac{C_s . C_p}{C_s + C_p}$$

2.6 ARMSTRONG OSCILLATOR

Based on Figure2.9 Resistors R1, R2 and R3 are intended to provide bias voltage to the transistor. Capacitors C1 and C2 are used to block the AC signal. This Circuit apply Common Emitter amplifier configuration will provide different phase of the output signal 180°. The base circuit of transistor contains a tank circuit with L2 and C2. This tank circuit determines the oscillation frequency of the oscillator circuit.

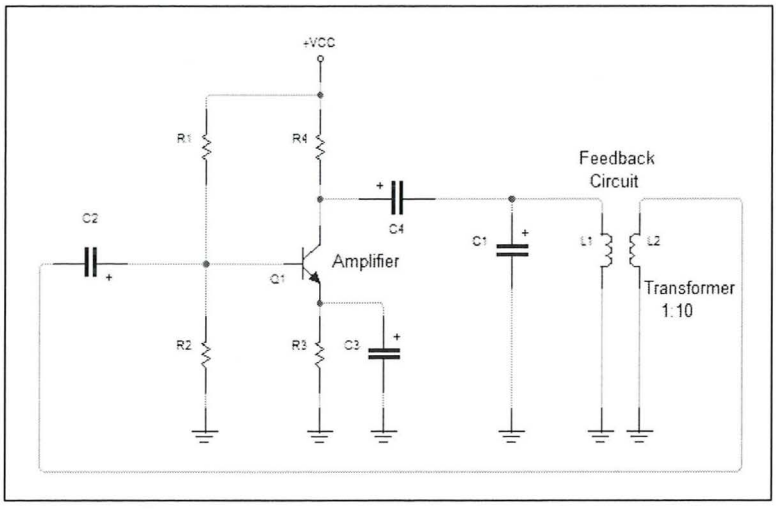

Figure 2.9: Armstrong Oscillator Circuit

Therefore the transformer Tr is selected so as to produce a phase shift of 180° to get a feedback voltage in phase with the input transistors. Usually the ratio between the coil windings L1 to L2 coils arranged so that the product of the gain, A, the feedback factor β, equal 1. ($|A\beta| = 1$).

Example: if the amplifier gain is 10, coil ratio should be 1:10.

$$\mathbf{A\,\beta = 10 \times 0.1 = 1}$$

Frequency resonance is determined by the circuit L2.C2 given by

$$fr = \frac{1}{2\pi\sqrt{L_2 C_2}}$$

2.7 PRACTICES



Multiple Choice Questions

1. Identify which is NOT the requirement of oscillator Circuit.
   A. Amplifier
   B. Rectifier
   C. Tank Circuit
   D. Positive Feedback

2. It is desired to build a common –Emitter oscillator that operates at frequency. The feedback circuit is required to provide.
   A. 0° phase shift at frequency
   B. 90° phase shift at frequency
   C. 180° phase shift at frequency.
   D. 360° phase shift at frequency.

3. The function of quartz crystals used in oscillators as
   A. Piezoelectric effect.
   B. Semiconductor effect
   C. Diode action
   D. Transistor action

4. Calculate the frequency of oscillations of a Colpitts Oscillator circuit that have two capacitors of 20pF and 10pF which are connected in parallel with an inductor of 15mH.
   A. 50017 Hz
   B. 499.0 Hz
   C. 503.171 Hz
   D. 542.211 Hz

5. Calculate the frequency oscillation of the phase-shift RC oscillator shown in Figure 2.10. Given C = 1μF and R=1KΩ.

A. 26 Hz

B. 65 Hz

C. 135 Hz

D.238 Hz

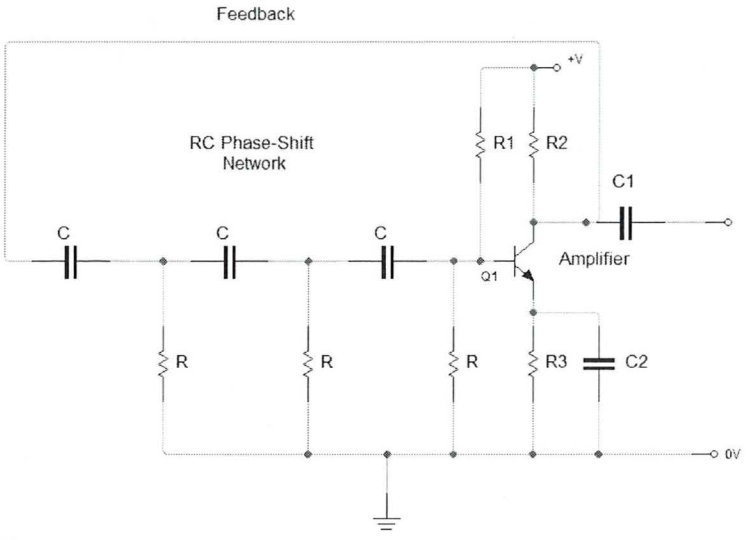

Structure Questions

1. Draw the block diagram of an oscillator and name each of the block?
2. Draw the feedback circuit for Hartley Oscillator.
3. State THREE (3) differences between LC oscillator and RC oscillator.
4. Sketch equivalent circuit of a Crystal oscillator if Rs=700Ω, Ls=0.09H, Cs=0.005pF and Cp=10pF. And calculate the series frequency resonance for the oscillator.
5. Calculate the expected output frequency for the circuit shown in Figure 2.11.

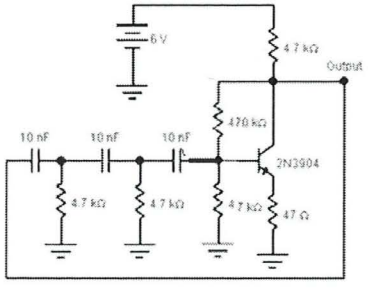

Figure 2.11

Essay Questions

1. From the circuit in Figure 2.12 Answer question below.

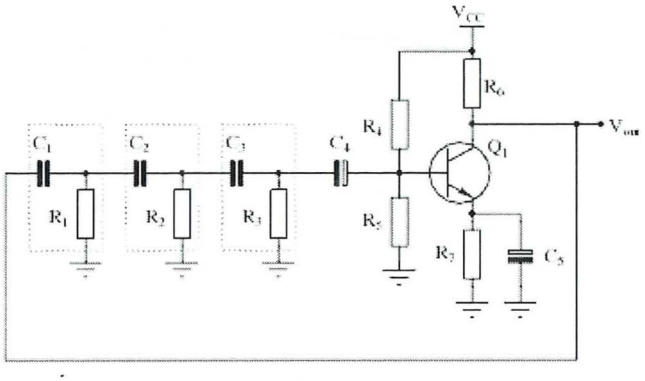

Figure 2.12

a. Name type of the oscillator.

b. Explain the operation of the circuit.

c. Determine value of capacitor if value of frequency oscillation is 6.5KHZ and resistor is 1KHz.

2. a. Compare what is the different between Colpitt's Oscillator and Hartley Oscillator?

b. Sketch equivalent circuit of a Crystal oscillator if Rs=700Ω, Ls=0.09H, Cs 0.005pF and Cp=10pF. And calculate the series frequency resonance for the oscillator.

CHAPTER 3

OPERATIONAL AMPLIFIER

3.1 INTRODUCTION

Operational amplifiers are linear devices that have all the properties required for nearly ideal DC amplification and are therefore used extensively in signal conditioning, filtering or to perform mathematical operations such as add, subtract, integration and differentiation. An operational amplifier is a very close approximation to a perfect amplifier with an infinite gain. In reality op-amps do not quite attain perfection, but with gains often in the region of 100 000 or more, they are sufficiently close.

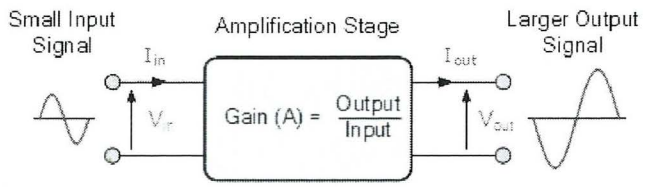

The operational amplifier has two inputs. One is called the inverting input and is marked with a "-" sign on circuit schematic diagrams. The other is the non-inverting input and this is marked with a "+" sign.

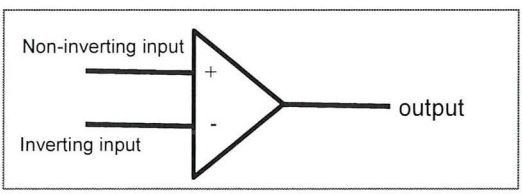

Figure 3.1: Symbol of Operational Amplifier

The two inputs gain their names from the way in which they amplify the signals:

- **Non-inverting input:** The operational amplifier non-inverting input is marked by a "+" sign on the circuit diagram. It is found that a positive voltage applied to the non-inverting input will produce a positive swing at the output.
- **Inverting input:** The operational amplifier inverting input is marked by a "-" sign on the circuit diagram. A positive voltage applied to the inverting input will produce a negative swing at the output.

If the same voltage is applied to both inputs together then there should be no change at the output. In fact the output is proportional to the difference between the inverting and non-inverting inputs. It is for this reason that these amplifiers are often called differential amplifiers.

Like any electronics circuit, those using **operational amplifiers need to have a power supply.** Normally op-amps are supplied using dual, i.e. positive and negative supplies. Additionally the supply lines are often not shown as they add confusion to the circuit diagram. In most cases the operational amplifier will only need five connections for its operation - inverting, non-inverting, output and the two power rails. Very occasionally a further three may be used. These are usually for the "offset null" capability. This is used to reduce any DC offsets that may be present, and for most applications these can be ignored and left disconnected.

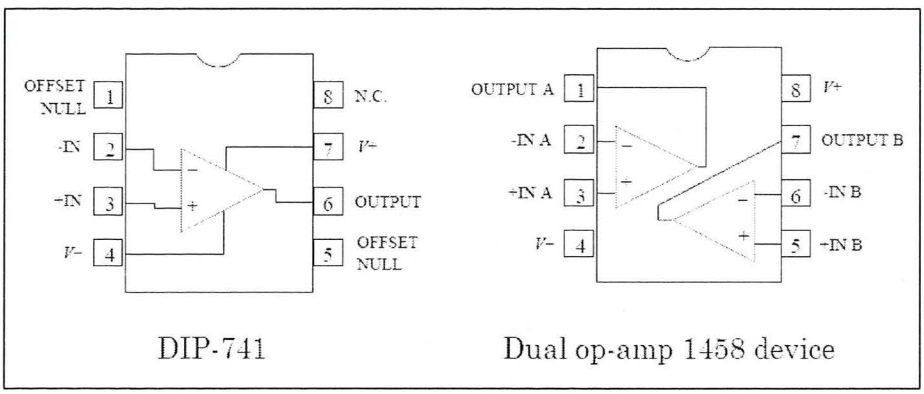

Figure 3.2: Pin Configuration of Operational Amplifier

3.2 STAGES IN OPERATIONAL AMPLIFIER

Stage 1 (Input Stage) - The **input stage is a differential amplifier**. The differential amplifier used as an input stage provides differential inputs and a frequency response down to d.c. Special techniques are used to provide the high input impedance necessary for the operational amplifier.

Stage 2 (Gain Stage) - The second stage is a high-gain voltage amplifier. This stage may be made from several transistors to provide high gain. A typical operational amplifier could have a voltage gain of 200,000. Most of this gain comes from the voltage amplifier stage.

Stage 3 (Output Stage)- The final stage of the OP AMP is an output amplifier. The output amplifier provides low output impedance. The actual circuit used could be an emitter follower. The output stage should allow the operational amplifier to deliver several miliamperes to a load. Notice that the operational amplifier has a positive power supply (+VCC) and a negative power supply (-VEE). This arrangement enables the operational amplifier to produce either a positive or a negative output.

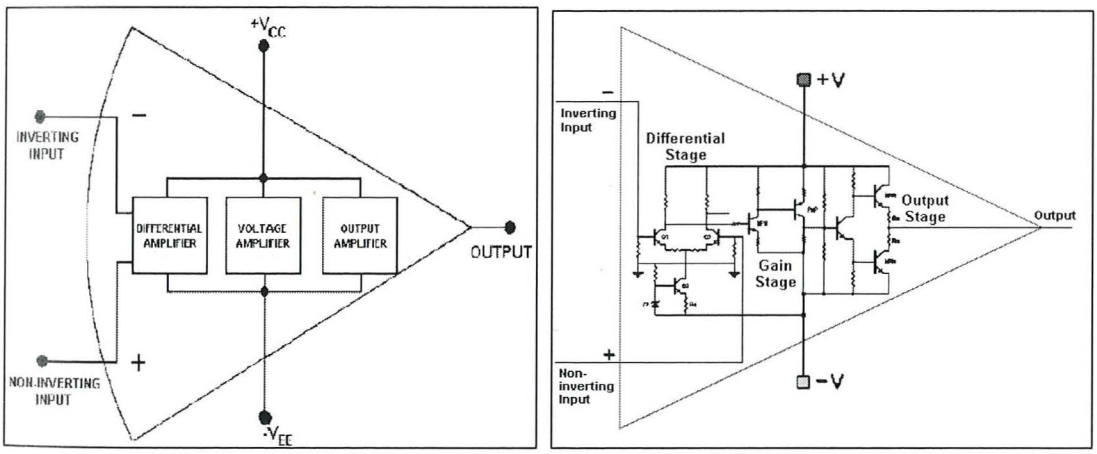

Figure 3.3: Block Diagram of Operational Amplifier

The two input terminals are labeled "inverting input" (-) and "non inverting input" (+). The operational amplifier can be used with three different input conditions (modes). With differential inputs (first mode), both input terminals are used and two input signals which are 180 degrees out of phase with each other are used. This produces an output signal that is in phase with the signal on the non-inverting input. If the non-inverting input is grounded and a signal is applied to the inverting input (second mode), the output signal will be 180 degrees out of phase with the input signal (and one-half the amplitude of the first mode output). If the inverting input is grounded and a signal is applied to the non-inverting input (third mode), the output signal will be in phase with the input signal (and one-half the amplitude of the first mode output).

3.2.1 Differential Amplifier Stage (Input Stage)

The circuit below shows a generalized form of a differential amplifier with two inputs marked V1 and V2. The two identical transistors TR1 and TR2 are both biased at the same operating point with their emitters connected together and returned to the common rail, -Vee by way of resistor Re.

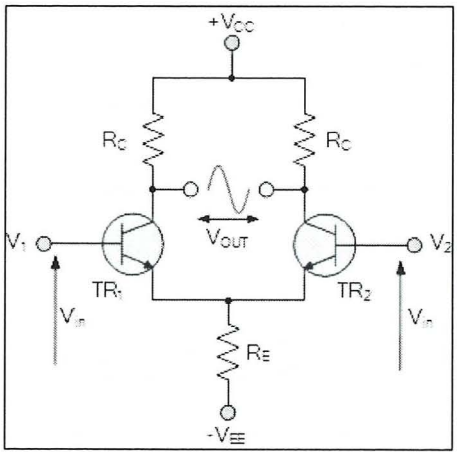

Figure 3.4: Differential Amplifier Circuit

- The circuit operates from a dual supply +Vcc and -Vee which ensures a constant supply. The voltage that appears at the output, Vout of the amplifier is the difference between the two input signals as the two base inputs are in anti-phase with each other.
- So as the forward bias of transistor, TR1 is increased, the forward bias of transistor TR2 is reduced and vice versa. Then if the two transistors are perfectly matched, the current flowing through the common emitter resistor, Re will remain constant.
- Like the input signal, the output signal is also balanced and since the collector voltages either swing in opposite directions (anti-phase) or in the same direction (in-phase) the

output voltage signal, taken from between the two collectors is, assuming a perfectly balanced circuit the zero difference between the two collector voltages.

- This is known as the **Common Mode of Operation** with the common mode gain of the amplifier being the output gain when the input is zero.
- Operational Amplifiers also have one output (although there are ones with an additional differential output) of low impedance that is referenced to a common ground terminal and it should ignore any common mode signals that is, if an identical signal is applied to both the inverting and non-inverting inputs there should no change to the output.
- However, in real amplifiers there is always some variation and the ratio of the change to the output voltage with regards to the change in the common mode input voltage is called the **Common Mode Rejection Ratio or CMRR** for short.
- Operational Amplifiers on their own have a very high open loop DC gain and by applying some form of Negative Feedback we can produce an operational amplifier circuit that has a very precise gain characteristic that is dependent only on the feedback used. Note that the term "open loop" means that there are no feedback components used around the amplifier so the feedback path or loop is open.
- An operational amplifier **only responds to the difference between** the voltages on its two input terminals, known commonly as the "Differential Input Voltage" and not to their common potential. Then if the same voltage potential is applied to both terminals the resultant output will be zero.
- An Operational Amplifiers gain is commonly known as the **Open Loop Differential Gain**, and is given the symbol (Ao).

3.2.2 Voltage Amplifier Stage (Gain Stage)

The second stage is usually a **class A amplifier (CE amplifier)** that provides additional gain. A typical operational amplifier could have a voltage gain of 200,000. Most of this gain comes from the voltage amplifier stage.

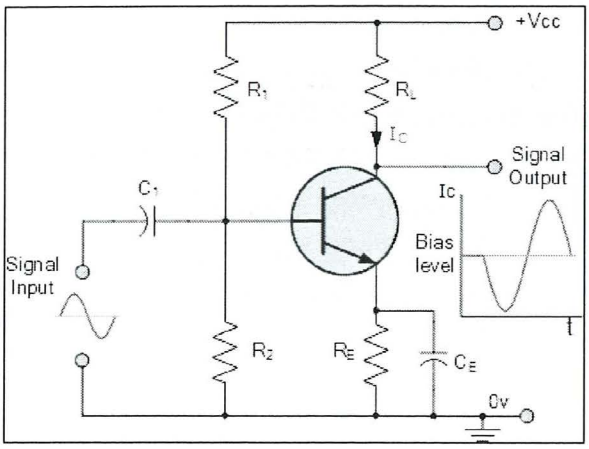

Figure 3.5: Class A Common Emitter Amplifier Circuit

3.2.3 Output Amplifier Stage

Power amplifier circuits (output stages) are classified as A, B, AB and C for analog designs and class D and E for switching designs. The power amplifier classes are based on the proportion of each input cycle (conduction angle) during which an amplifying device passes current. **A push-pull class B amplifier is typically used for the output stage**. The image of the conduction angle derives from amplifying a sinusoidal signal. If the device is always on, the conducting angle is 360°. If it is on for only half of each cycle, the angle is 180°. The angle of flow is closely related to the amplifier power efficiency.

The practical amplifier circuit shown below could be the basis for a moderate-power audio amplifier. It features a typical (though substantially simplified) design as found in modern amplifiers, with a class-AB push–pull output stage, and uses some overall negative feedback. Its operation are explain below;

- The input signal is coupled through capacitor C1 to the base of transistor Q1. The capacitor allows the AC signal to pass, but blocks the DC bias voltage established by resistors R1 and R2 so that any preceding circuit is not affected by it.
- Q1 and Q2 form a differential amplifier (an amplifier that multiplies the difference between two inputs by some constant), in an arrangement known as a long-tailed

pair. This arrangement is used to conveniently allow the use of negative feedback, which is fed from the output to Q2 via R7 and R8.

- The negative feedback into the difference amplifier allows the amplifier to compare the input to the actual output.
- The amplified signal from Q1 is directly fed to the second stage, Q3, which is a common emitter stage that provides further amplification of the signal and the DC bias for the output stages, Q4 and Q5.

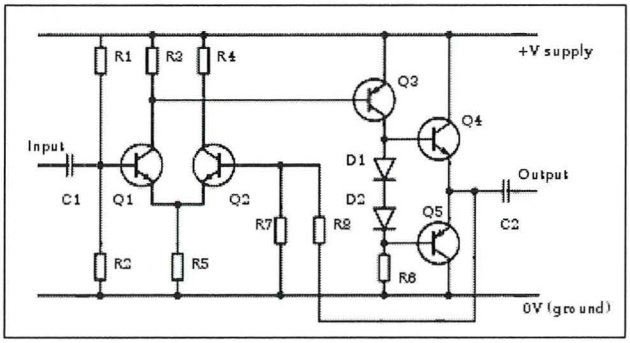

Figure 3.6: Practical Amplifier Circuit

- R6 provides the load for Q3 (a better design would probably use some form of active load here, such as a constant-current sink).
- So far, all of the amplifier is operating in class A. The output pair are arranged in class-AB push–pull, also called a complementary pair. They provide the majority of the current amplification (while consuming low quiescent current) and directly drive the load, connected via DC-blocking capacitor C2.
- The diodes D1 and D2 provide a small amount of constant voltage bias for the output pair, just biasing them into the conducting state so that crossover distortion is minimized. That is, the diodes push the output stage firmly into class-AB mode (assuming that the base-emitter drop of the output transistors is reduced by heat dissipation).

3.3 CHARACTERISTICS OF IDEAL OPERATIONAL AMPLIFIER

The Operational amplifiers or op-amps have a number of basic features some of which provide advantages, others limit their performance:

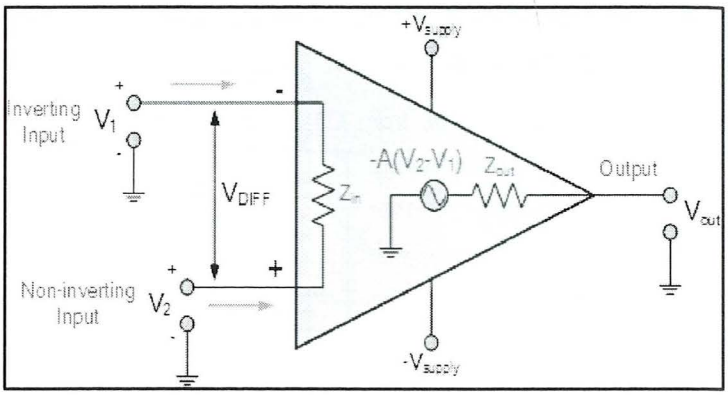

Figure 3.7: Equivalent Circuit of an Ideal Operational Amplifier

- **Infinite Voltage Gain:** One of the key attributes of operational amplifiers is their very high gain. Typical figures extend from around 10 000 upwards – figures of 100 000 and more are common. Although an open loop amplifier with a level of gain of this order would be of little use, op-amps are able to harness the advantages of the very high gain levels by using negative feedback. In this way the gain levels are very controllable and distortion levels can be kept very low.
- **Infinite Input Impedance:** In theory their input resistance should be infinite, and the op-amps in use today come very close to this with impedances anywhere from 0.25MΩ upwards. Some using MOSFET input stages have an impedance of hundreds of MΩ.
- **Zero Output Impedance:** In the ideal amplifier this should be zero, but in reality many amplifiers have an output impedance of less than a hundred ohms, and many very much less than this. That said, the drive capability of many IC based op-amps is naturally limited.
- **Infinite bandwidth:** The bandwidth of an op-amp can vary quite widely. An ideal amplifier would have an infinite bandwidth but as one may imagine this would be impossible create, and also very difficult to use and tame in practice. In reality op-amps have a limited bandwidth. Many of the chips used for audio applications may

only exhibit their full gain over a relatively small bandwidth, after this the gain falls. Despite this most circuits act to reduce the gain, and enable this smaller level of gain to be maintained over a larger bandwidth.

- **Zero Input Offset Voltage & Current:** The amplifiers output will be zero when the voltage difference between the inverting and the non-inverting inputs is zero, the same or when both inputs are grounded. Real op-amps have some amount of output offset voltage.

3.4 COMMON-MODE REJECTION RATIO (CMRR)

If a signal is applied **equally to both inputs** of an op amp, so that the differential input voltage is unaffected, the output should not be affected (Vo=0V). In practice, changes in common mode voltage will produce changes in output.

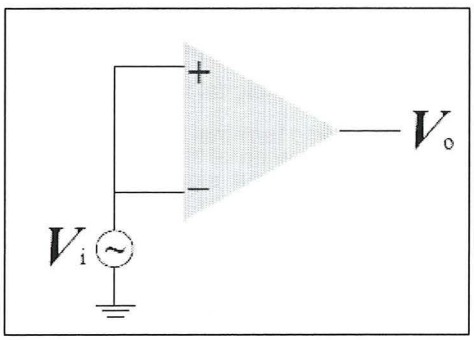

Figure 3.8: Common Mode Circuit

The op amp common-mode rejection ratio (CMRR) is the **ratio of the common-mode gain to differential-mode gain.** For example, if a differential input change of Y volts produces a change of 1 V at the output, and a common-mode change of X volts produces a similar change of 1 V, then the CMRR is X/Y. When the common-mode rejection ratio is expressed in dB, it is generally referred to as common-mode rejection (CMR)—please note that there is very little consistency in this throughout the semiconductor industry with regards to the use of dB or ratio values for CMR or CMRR.

$$\text{CMRR} = \frac{\text{Differential voltage gain, Adm}}{\text{Common mode voltage gain, Acm}}$$

3.5 OPERATIONAL AMPLIFIER MODES OF OPERATION

The OP AMP is a direct coupled, high gain amplifier used to perform a wide variety of mathematical operation used to perform summation, substraction, multiplication, differentiation and integration etc. In analog computers it is often reffered to as the basic linear (or analog) integrated circuit (IC). The operational amplifier works in different modes depending on the nature of its job. These modes are:

- **Single Ended Operation**

When a differential amplifier is operated in this mode, one input is ground and the signal voltage is applied only to the other input. In figure 3.9, input signal is applied to terminal 1 and terminal 2 is ground. While, when input signal Vin2 is applied to input terminal 2, an amplified and inverted signal appears at output terminal 4 whereas equally amplified but in phase signal appears at terminal 3 this is shown in Figure 3.10.

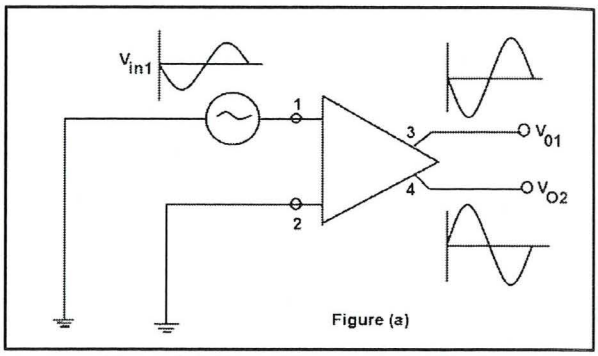

Figure 3.9: When Vin is applied at Pin 1

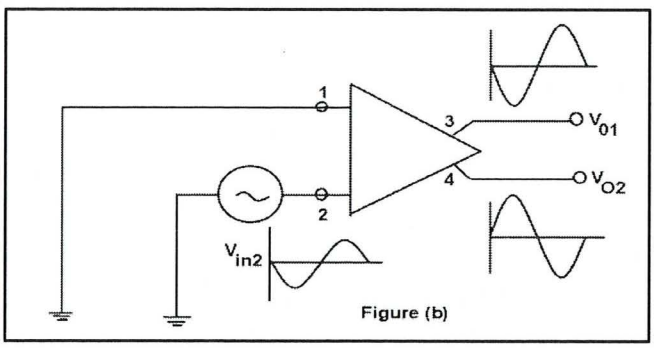

Figure 3.10: When Vin is applied at Pin 2

- **Differential Operation (Double Ended Operation)**

In this mode, two opposite polarity (out of phase) signals are applied to the inputs as shown in Figure 3.11.

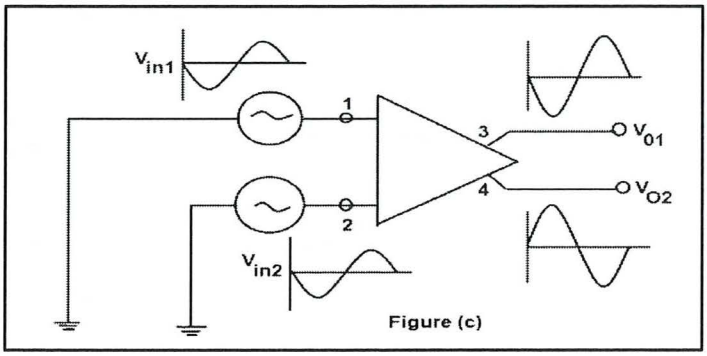

Figure 3.11: Differential operation

Input signal at each input terminal causes signal to appear at both output terminals. The resultant output signals have a peak value twice the value for single ended operation.

- **Common Mode Operation**

If in two in-phase and equal signals are applied at two input terminals, the resultant output signal at each output terminal would be zero this is shown in Figure 3.12 below. In other words, the output between collectors would be zero.

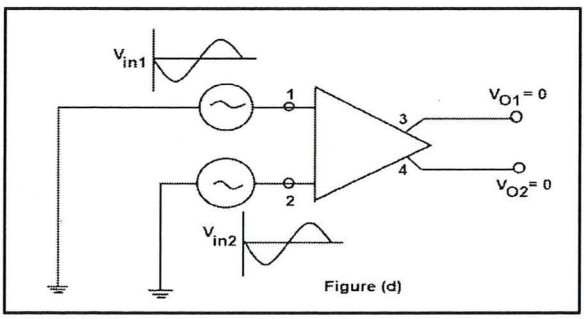

Figure 3.12: Common Mode Operation

- **Inverting and non-inverting inputs**

When positive Vin1 act alone, it produce a different output voltage with terminal 4 positive with respect to terminal 3 that is why the input terminal 1 is called non-inverting input terminal. When positive Vin2 acts alone, the output voltage is inverted and the

terminal 3 becomes positive with respect to terminal 4. That is why input terminal is called inverting terminal. It can be see in Figure 3.9 and 3.10 .

3.6 INVERTING AMPLIFIER

This circuit was name Inverting Amplifier by looking at the Input signal was at the Inverting input (-) of Op-Amp. It is a basic operational amplifier circuit and very common circuit in electronic design. A feedback circuit was constructed to produce a closed loop operation. There are **2 important rules to remember**:

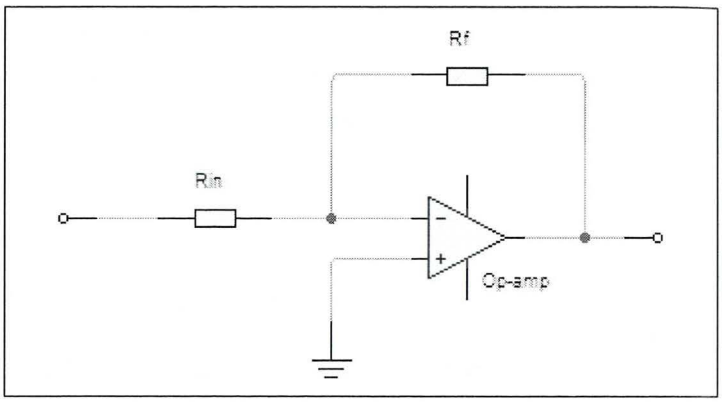

Figure 3.13: Inverting Amplifier Circuit

- **NO** current flows into the input terminal
- Input voltage (Vin) is **equal** with output voltage (Vout).

  This is because the junction of the input and feedback signal is the same potential as the positive (+) input which is at zero or ground then, the junction is a 'Virtual Earth'.

  Because of the input resistor, Rin and the closed loop gain of the inverting amplifier can be set by the ration of the two resistors.

By considering all the rules, we can derive the equation below.

$$Voltage\ Gain\ (Av) = \frac{Vout}{Vin} = -\frac{Rf}{Rin}$$

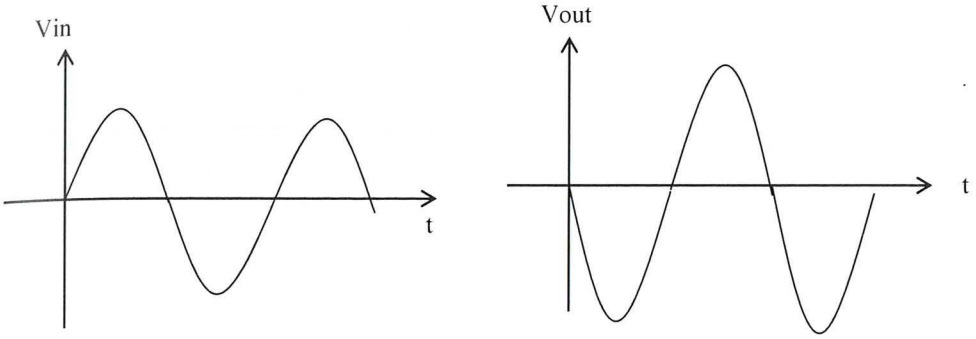

Input waveform

Output waveform

3.7 NON-INVERTING AMPLIFIER

The second common amplifier circuit is a Non-Inverting amplifier. In this configuration, input voltage (Vin) was applied directly to the non-inverting input (+) of Op-Amp. Feedback control of the non-inverting amplifier is achieved by applying a small part of the output voltage signal back to the inverting input (-) terminal thru Rf and R2 voltage divider network and again, it will produced negative feedback. This closed loop configuration produced a very good stability, a very high input impedance (Rin) which is approaching infinity (∞) and low output impedance. The circuit of non-inverting amplifier as shown above.

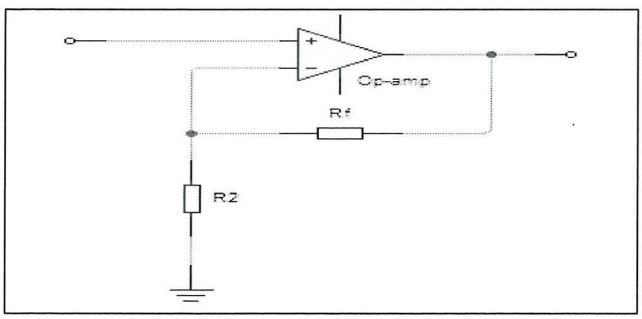

Figure 3.14: Non-Inverting Amplifier

The formula to calculate the gain (Av) for this configuration as stated below:

$$\textbf{Voltage Gain } (Av) = \frac{Vout}{Vin} = 1 + \frac{Rf}{R2}$$

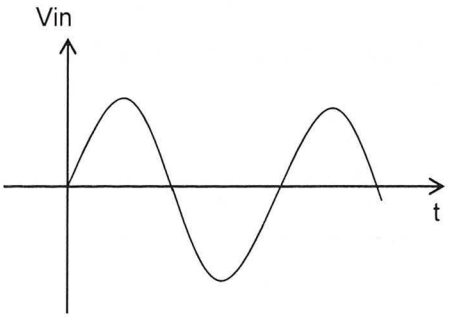

Input waveform

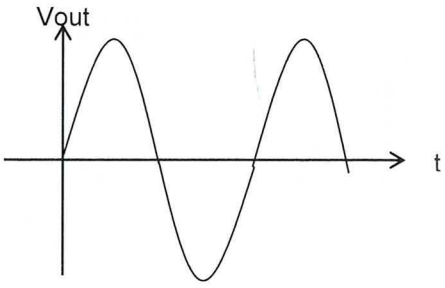

Output waveform

3.8 SUMMING AMPLIFIER

The summing amplifier circuit is a very flexible circuit based upon the basic inverting amplifier circuit. It can be used for combining multiple inputs. As the inverting amplifier circuit explained before, there are only a single (1) input applied to the inverting input. If we add more input resistors to the input, each equal in value to the original input resistor (Rin), so we end up with another operational amplifier configuration, called **Summing Amplifier** as shown in the figure above.

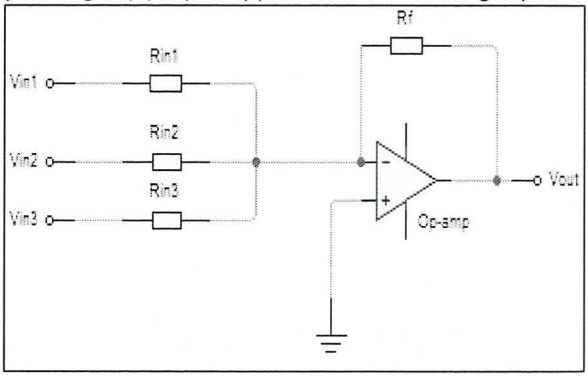

Figure 3.15: Summing Amplifier

The Summing amplifier will amplify each individual input voltage and produce an output voltage signal that is proportional to the algebraic "SUM" of the three input voltages V1, V2 and V3. The input can also be add if required. This configuration is a very flexible circuit indeed, enabling us to effectively 'Add' or 'SUM' together several individual input signals. Below is the formula to calculate the value of output voltage (Vout).

$$Output\ Voltage\ (Vout) = -\frac{Rf}{R2}(V1 + V2 + V3)$$

Or

$$Output\ Voltage\ (Vout) = -\frac{Rf}{Rin}V1 + \frac{Rf}{Rin}V2 + \frac{Rf}{Rin}V3$$

3.9 DIFFERENTIATOR AMPLIFIER

The Differentiator amplifier configuration is the exact opposite to that of the Integrator operational amplifier circuit. When a voltage input is applied, the capacitor blocks any DC content, so there is no current flow to the amplifier summing point, resulting in **ZERO** output voltage. The capacitor only allows AC type input voltage changes to pass through and whose frequency is dependent on the rate of change of the input signals.

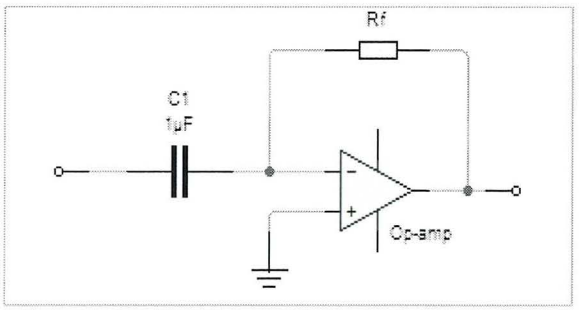

Figure 3.16: Differentiator Amplifier

3.9.1 Circuit Operation

→*at* ***LOW input frequency*** *:* Capacitance reactance (Xc) is HIGH.

Resulting in a LOW gain (Rf / Xc)

LOW output voltage

→*at* ***HIGH input frequency****:* Capacitance reactance (Xc) is LOW.

Resulting in a HIGH gain (Rf / Xc)

HIGH output voltage

Circuit become UNSTABLE and start to oscillate (due to the first-order effect, which determines the frequency response of the op-amp circuit causing a second-order response which, at high frequencies gives an output voltage far higher than what would be expected. A feedback resistor (Rf) need to be add in this circuit to reduce the high frequency gain).

3.9.2 Disadvantages of Differentiator Amplifier:

- Instability at high frequencies
- Capacitive input makes it very susceptible to random noise signals and any noise or harmonics present in the source circuit, so it makes the circuit will amplified more than the input signal itself.

To calculate the Output voltage, Vout the formula below will be used;

$$Vout = -RfC\frac{dVin}{dt}$$

Below is the input and output signal of Differentiator Amplifier configuration,

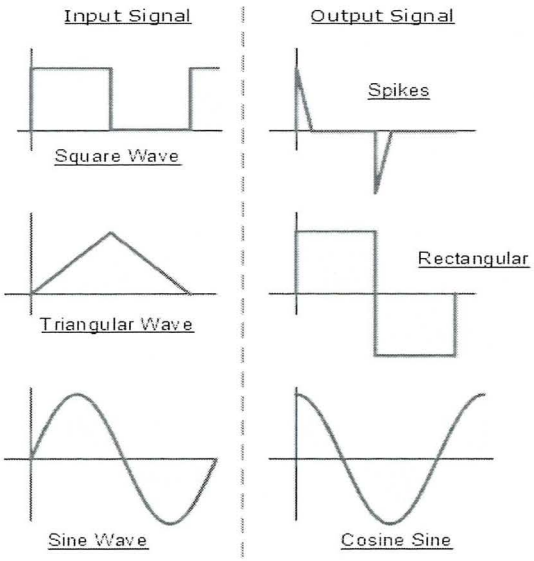

3.12 PRACTICES

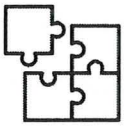

Multiple Choice Questions

1. An amplifier that response to the difference between two input signals in operational amplifier called_____.
   a. Voltage Amplifier
   b. Differential Amplifier
   c. Inverting Amplifier
   d. Output Amplifier

2. Which of the following characteristics **DOES NOT** necessarily apply to an operational amplifier?
   a. High gain
   b. Low power
   c. High input impedance
   d. Low output impedance

3. "The output of this amplifier is the integral of the input. It is also used for low pass filter circuit and sensor circuit". This statement is referring to:
   a. Inverting amplifier
   b. Non-inverting amplifier
   c. Integrator amplifier
   d. Differential amplifier

4. What is the closed loop voltage gain of an inverting amplifier?
   a. The ratio of the input resistance to the feedback resistance.
   b. The open loop voltage gain
   c. The feedback resistance divided by the input resistance.
   d. The input resistance.

5. According to figure below, pin number 6 represent
   a. Inverting input
   b. Non-inverting input
   c. Output
   d. Supply voltage

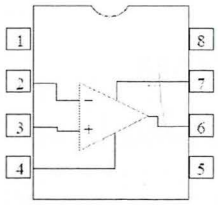

DIP-741

Essay Questions

1. Referring to the figure below, define the Common Mode Rejection Ratio (CMRR) of a non-inverting amplifier. Then, calculate the CMRR and express it in the Decibel (dB). Its common mode gain is 0.01.

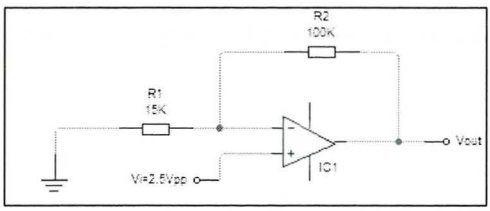

2. Compare the **THREE (3)** ideal to the practical characteristics of operational amplifier. Describe the CMRR and calculate the CMRR when feedback resistor, Rf=100kΩ, Resistor R1=10kΩ and Common Mode Gain = 0.001 when the input signal applied to the non-inverting input.

3. Express the output voltage equation, Vout with drawing the circuit of non-inverting amplifier. Hence calculate the output voltage if RF=10k, R1=5k and input voltage = 1mVpp. Draw the waveform of the input and output voltage simultaneously.

CHAPTER 4

TIMER

4.1 INTRODUCTION

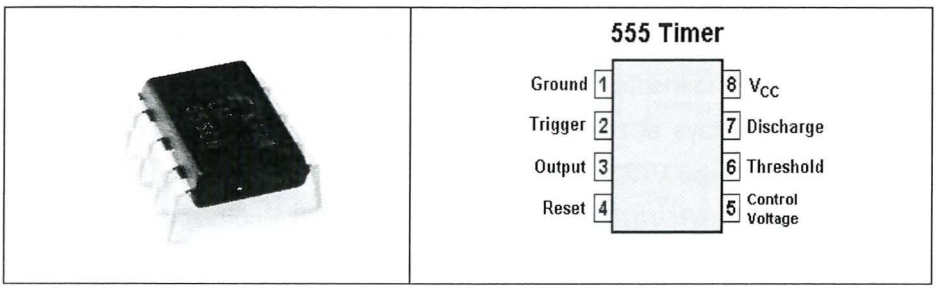

Figure 4.1: IC Timer 555 and IC Timer 555 configuration

The 8-pin 555 timer must be one of the most useful ICs ever made and it is used in many projects. With just a few external components it can be used to build many circuits. A popular version is the NE555 offers low cost and versatility. The 555 provide stable time delays or free running oscillation. Figure 4.2 shows the main section of the 555 timer IC. Its contains two voltage comparator, a bistable flip-flop, a discharge transistor, a resistor divider network and output amplifier. There are three divider resistor and each is 5 KHz. This divider network sets the threshold comparator 2 point at VH 2/3VCC and the trigger comparator 1 at VL 1/3VCC.

CONTROL pin (pin 5), which can be used for external adjustment of the threshold and trigger levels. The comparator 1 and comparator 2 outputs are the set S and reset R respectively for the flip-flop. When the *TRIGGER* input falls below the trigger level VL, the output of the voltage comparator 1 goes high and sets the flip-flop. If the *TRIGGER* input is above the trigger level, and the *THRESHOLD* input is above the threshold level VH, the output of the voltage comparator 2 is high and the flip-flop is reset.

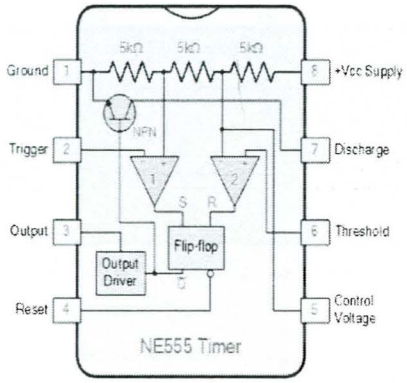

Figure 4.2: Functional Block Diagram of the NE555 IC timer

The output driver is capable of sourcing current up to about 200mA. The collector of the discharge transistor Q1 is available at the *DISCHARGE* pin (pin 7). The active-low *RESET* input (pin 4) to the flip-flop can be used to disable the timer operation and ensure that the *OUTPUT* stays at zero, regardless of the comparator outputs. The dc supply voltage can be between VCC = 5V and VCC = 15V. It should be connected between the *VCC* (pin 8) and the *GROUND* (pin 1). With a 5V supply, the output, and the *RESET* input levels are compatible with standard TTL or CMOS digital logic circuits.

4.2 MONOSTABLE MODE

Figure 4.3 shows the IC Timer connected for the Monostable Mode or *one shot* mode. This mode produced an RC controlled output pulse that goes high when the devices are triggered. The timer is negative edge triggered. The *width* of the output pulse is RC controlled in the one shot circuit.

As shown in Figure 4.4 the timing capacitor begins charging through the timing resistor when the timer is triggered. When the capacitor voltage reaches 2/3VCC, the

time period (T) / width(w) = time period in seconds (s)

R = resistance in ohms (Ω)

C = capacitance in farads (F)

Note: The maximum reliable time period is about 10 minutes.

- Choose C1 first (there are relatively few values available).
- Choose R1 to give the time period you need. R1 should be in the range 1kΩ to 1M Ω, so use a fixed resistor of at least 1kΩ in series if R1 is variable.
- Beware that electrolytic capacitor values are not accurate, errors of at least 20% are common.

Example 4.1

Find the output pulse width for Figure 4.3 if R=10 kΩ and C=0.1μF. The pulse width is equal 1.1ms regardless of the input pulse width..

Pulse width (w) = 1.1 RC

= 1.1 (10kΩ)(0.1μF)

= 1.1 ms

4.3 ASTABLE MODE

Astable Multivibrator known as Free Running Multivibrator. This type does not have a stable state. The situation is changing. Astable does not require the trigger pulse from the outside to change the output. Time for the output is at HIGH or LOW state can be calculated based on the values of resistors (RA and RB) and capacitors (C) connected to the external timer as shown in Figure 4.5.

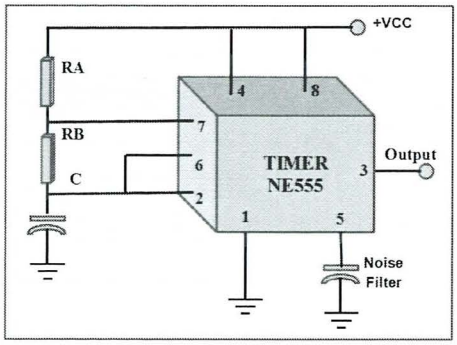

Figure 4.5: Timer Astable Mode Circuit

Figure 4.6 shows output pulse timer Astable Mode for pin 3 and pin 6. The trigger (pin2) is tied to the threshold (pin 6). When the circuit is turned on, timing capacitor C is discharged. Its begin charging through the series combination of RA and RB. When the capacitor voltage reach 2/3 VCC, the output drops low and the discharge transistor come on. The capacitor now discharge through RB. When the capacitor reaches 1/3 VCC, the output switches high and the discharge transistor is turned off. The capacitor now begins charging through RA and RB again. The cycle will repeat continuously with the capacitor charging and discharging and the output switching high and low.

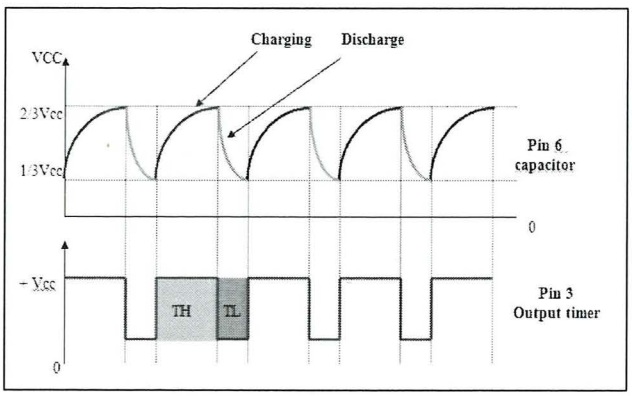

Figure 4.6: Output Pulse Timer Astable Mode

The charge path for the Astable circuit is through the two resistor with same value 10KΩ and the timing capacitor is 0.1μF. The time output will be *time high* (TH) given by

$$T_{High} = 0.693(R_A+R_B)C$$
$$= 0.693(10K+10K)0.1\mu$$
$$= 1.386ms$$

The discharge path is through only one resistor (RB) so the time that the output is *time low* (TL) given by

$$T_{Low} = 0.693(R_B)C$$
$$= 0.693(10K)0.1\mu$$
$$= 0.693ms$$

The output waveform is non symmetrical. The total period or *Time* can be found by adding T_{High} and T_{Low}.

$$Time\ (T) = T_{High} + T_{Low}$$
$$= 1.386ms + 0.693ms$$
$$= 2.079ms$$

The output frequency will be equal to the inversion of the total period or time. Or the output frequency can be calculate by

$$Frequency\ (f) = \frac{1}{T}$$
$$= \frac{1}{2.079ms}$$
$$= 481Hz$$

$$Frequency\ (f) = \frac{1.44}{(RA+2RB)C}$$
$$= \frac{1.44}{(10K+2(10K))0.1\mu}$$
$$= 481Hz$$

The *duty cycle* of a rectangular waveform is the percentage of time during the output is *time high.* It can be found by dividing the total period of the waveform into the time that the output is high.

$$\text{Duty Cycle } (D) = \frac{TH}{T} \times 100\%$$

$$= \frac{1.386ms}{2.079ms} X\ 100\%$$

$$= 66.67\%$$

$$\text{Duty Cycle}(D) = \frac{RA\ X\ RB\ X\ 100\%}{RA + 2RB}$$

$$= \frac{10K\ X\ 10K\ X\ 100\%}{(10K+2(10K)}$$

$$= 66.67\%$$

4.4 BISTABLE MODE

Bistable mode is a less common configuration in 555 timer designs where the circuit has two stable states but doesn't actually producing any timing signals. Bistable circuits are also known as flip-flops because they flip to one state when triggered, then flop back to the other state when reset. Bistable circuits can be used in switching and latching circuits, counters, shift registers, and primitive memory circuits. Figure 4.7 show the circuit for Timer Bistable Mode.

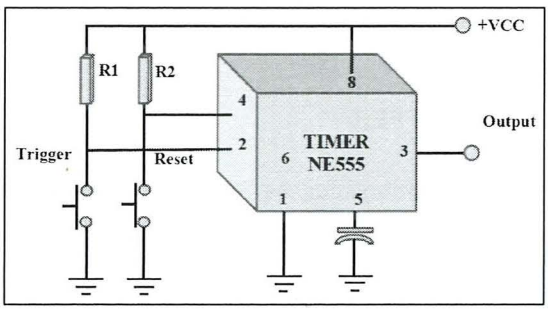

Figure 4.7: Timer Bistable Mode Circuit

When using a 555 timer in Bistable mode, there's no need to use equations to determine component values. The Bistable circuit has no associated time constants. The simple schematic in Figure 4.7 shows two resistors R1 and R2 connected between VCC and the Trigger and Reset inputs. These resistors hold the Trigger and Reset inputs high

until pushing either the Trigger or Reset push button grounds one or the other of these inputs.

The operation of Bistable mode by pushing the Trigger push button grounds Pin 2, effectively making the Trigger input of the 555 timer low, which drives the Output high. Pushing the Reset push button grounds Pin 4, making the Reset input low. This drives the Output low. The Control and Discharge inputs are not used. Figure 4.8 show the output pulse for timer Bistable Mode.

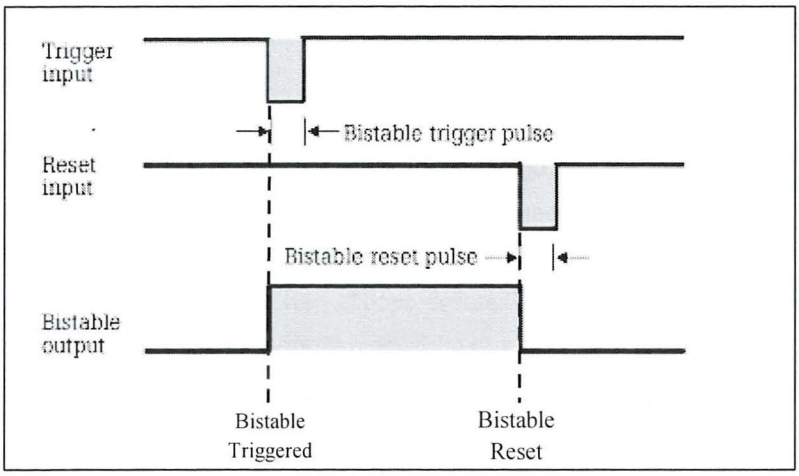

Figure 4.8: Output Pulse Timer Bistable Mode

4.5 SCHMITT TRIGGER - BUFFER

There are basically two symbols for the Schmitt Trigger. The symbol is a triangle with an input and an output, just like the one used for the non-inverting buffers. Inside there is the hysteresis symbol. Depending on the type of Schmitt Trigger, inverting or non-inverting (standard), the hysteresis curve sign differs.

Non inverting Schmitt Trigger	Inverting Schmitt Trigger
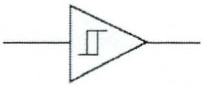	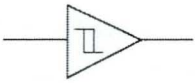

Figure 4.9: Schmitt Trigger Symbol

The Schmitt Trigger is a type of comparator with two different threshold voltage levels. Whenever the input voltage goes over the High Threshold Level (HTL) / Upper Trigger Point (UTP) , the output of the comparator is switched HIGH (if is a standard ST) or LOW (if is an inverting ST). The output will remain in this state, as long as the input voltage is above the second threshold level, the Low Threshold Level (LTL) / Lower Trigger Point (LTP). When the input voltage goes below this level, the output of the Schmitt Trigger will switch.

The HIGH and LOW output voltages are actually the POSITIVE and NEGATIVE power supply voltages of the comparator. The comparator needs to have positive and negative power supply (like + and -) to operate as a Schmitt Trigger normally. The following drawing shows how a Schmitt Trigger would react to an AC voltage input:

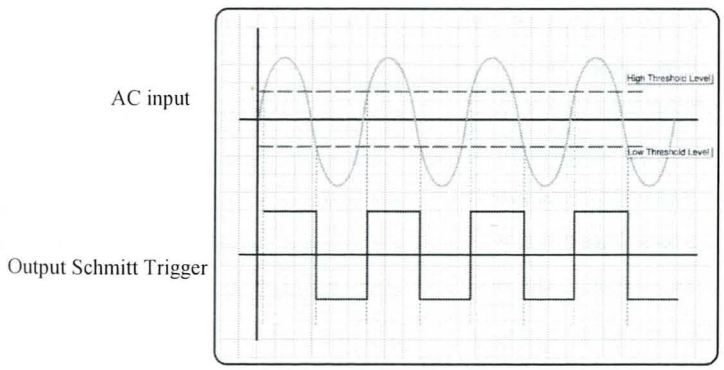

Figure 4.10: Input and Output Schmitt Trigger

The orange line sinus is the AC input. The horizontal RED line indicates the *High Threshold Level*, while the BLUE horizontal line indicates the *Low Threshold Level*. The green line square is the output of the Schmitt Trigger. When the input voltage level goes above the High Threshold Level, then the output of the ST goes High. When the input voltage level goes below the Low Threshold Level, then the output of the ST goes Low. This is the basic operation of a Schmitt Trigger.

4.5.1 Non Inverting Schmitt Trigger

The non-inverting Schmitt trigger uses a simple feedback resistor connected as shown in Figure 4.11. Using the component values shown, we will analyze the operation of the non-inverting Schmitt trigger. Note that R_{in} =R_f =10 kΩ. as you know, the high input impedance of the op-amp cause the current through the two resistors to be equal. Therefore, the voltages across the component are also equal. This is a key point in the operation of the circuit.

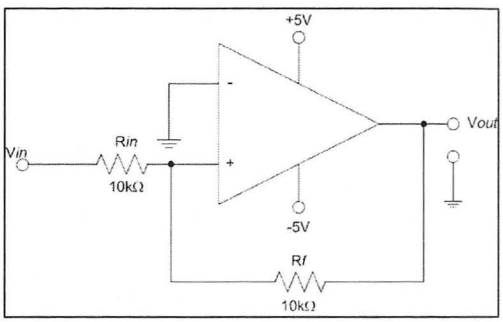

Figure 4.11: Non Inverting Op Amp Schmitt Trigger Circuit

We will start our discussion of the circuit operation by assuming that V_{out} = -4 V (its negative limit). The waveforms in Figure 4.12 show that V_{in} reaches a values of +4 V at t_0. When this occurs, there is a 4 V difference of potential across each resistor in the circuit, and the noninverting input to the op-amp is at 0 V. As the input goes more positive than + V, the noninverting input to the op-amp becomes

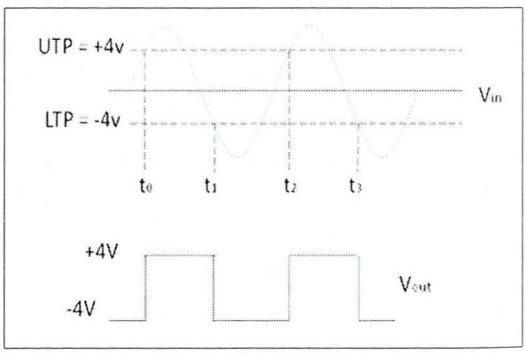

Figure 4.12: Output Waveform for Non Inverting Schmitt Trigger

more positive than the inverting input, and the output goes to +4 V. (*Remember: The maximum output approximately 1 V less that the supply voltage.*)

4.5.2 Inverting Schmitt Trigger

A basic inverting Schmitt trigger is shown in Figure 4.13 in this circuit, the input (Vin) is applied to the inverting terminal. A feedback signal is applied to the non-inverting terminal from the junction of R_{f1} and R_{f2}.

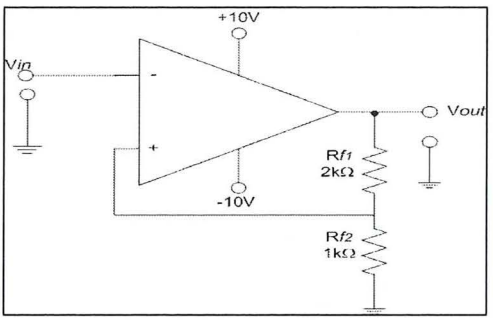

Figure 4.13 : Inverting Op-Amp Schmitt Trigger

First, remember that the operation of the circuit an inverting Schmitt Trigger. Therefore, the output goes low when the UTP is passed and high when the LTP is passed. This point is illustrated in Figure 4.14. The waveform shown here are the input and output waveforms for the circuit in Figure 4.13. As you can see, the input and output waveforms are out of phase by 180^0.

When the output is at +9 V, the voltage across R_{f2} is +3 V. as the input passes +3 V (at t_0), the output switches to -9 V. Now, the voltage across R_{f2} is -3V. With this voltage applied to the non-inverting input of the op-amp, the output does not switch again until the input passes -3V (at t_1). The basic inverting Schmitt Trigger has one limitation. If you look at the Figure 4.13, it is not very difficult to figure out that the UTP and LTP values must always be equal in magnitude for this circuit. This is due to the constant resistance ratio and the equal magnitudes of the two output voltages.

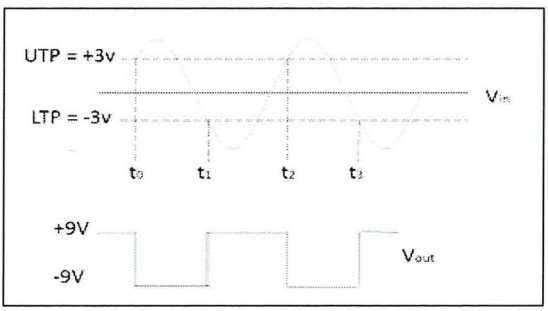

Figure 4.14: Output Waveforms For An Inverting Schmitt Trigger

4.5.3 Application of Schmitt Trigger

There are not specific applications for a Schmitt Trigger. It can be used for example as a window comparator. Or it could be used with a thermistor for heating control, or with an LDR for light control circuits. But there are specific applications where a Schmitt Trigger is just perfect for the job. This is the squaring of a signal.

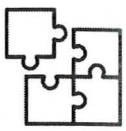

4.6 PRACTICE

Multiple Choice Questions

1. Calculate the value of capacitor for Monostable 555 timer circuit. Given R1=90.9K and the output pulse width is 1ms.
   A. 0.1μF
   B. 0.01 μF
   C. 0.001 μF
   D. 1.0 μF

2. Identify the output waveform produce by Schmitt Trigger when the input wave as shown in Figure 4.15 below.

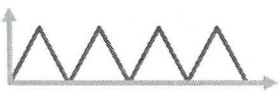

Figure 4.15

A.

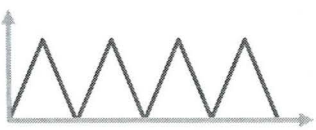

B.



C.

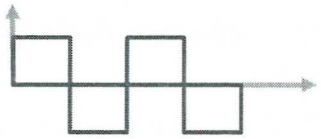

D.



3. A timer is connected in Astable Mode. Calculate the Time High when R1=8KΩ, R2=2.5KΩ, C1=0.1μF and given C2=0.01μF is used as noise diverter.
   A. 0.017ms
   B. 0.073ms
   C. 0.728ms
   D. 0.173ms

4. The output of the 555 Timer for Astable Multivibrator mode is _____.
   A. Constantly switching between two states.
   B. Low until a trigger is received
   C. High until a trigger is received
   D. Always square

5. Based on the circuit in Figure 4:16 calculate value of resistor (R) if pulse width of the output wave Timer Monostable mode is 0.4ms.
   A. 23.63KΩ
   B. 30.36KΩ
   C. 36.36KΩ
   D. 43.46KΩ

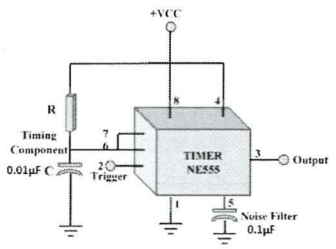

Figure 4.16

Essay Questions

1. a. Draw the schematic diagram of the timer 555 with Monostable Mode operation.
   b. Sketch the waveform at pin 2, pin 3 and pin 6.
   c. Calculate the pulse width (W) if R=2KΩ and C=0.01μF.

2. a. Draw a Timer Astable Mode Circuit
   b. Calculate the value of Time High (TH), Time Low (TL), Frequency (F) and Duty Cycle for Timer Astable Mode. Given value RA = 230Ω, RB=75Ω and C=0.1μF for electrolytic and 0.01μF for seramic capacitor.
   c. Draw the output at Pin 3 and Pin 6.

CHAPTER 5

FILTER

5.1 INTRODUCTION

A filter separates different components that are mixed together. For instance, a mechanical filter can separate particles from liquid or small particles from large articles. An electrical filter can separate different frequency components. Generally, inductors and capacitor are used for filtering because of their opposite frequency characteristics. Reactance, XL increase but Xc decrease with higher frequencies. In addition, their filtering action depends on whether L and C are in series or parallel with the load. The most common filtering applications are separating audio from radio frequencies or vise versa and separating ac variations from the average dc level.

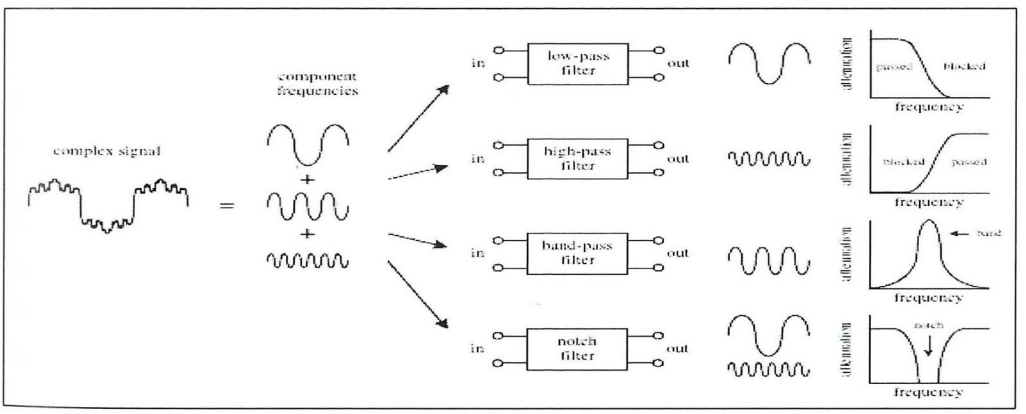

There are two generic types of filter: passive and active. The first type comprises simple resistors, capacitors and inductors while the second has addition of active components, usually in the form of operational amplifiers. Both of these types are sub

divided into four major types include low-pass filters, high-pass filters, bandpass filters, and notch filters (and band-reject filters). A low-pass filter passes low-frequency components of an input signal, while a high-pass filter passes high-frequency components. A band pass filter passes a narrow range of frequencies centered around the filter's resonant frequency, while a notch filter passes all frequencies except those within a narrow band centered around the filter's resonant frequency.

Filters have many practical applications in electronics. For example, within a dc power supply, filters can be used to eliminate unwanted high-frequency noise present within the ac line voltage, and they act to flatten out pulsing dc voltages generated by the supply's rectifier section. In radio communications, filters make it possible for a radio receiver to provide the listener with only the desired signal while rejecting all others. Likewise, filters allow a radio transmitter to generate only one signal while attenuating other signals that might interfere with different radio transmitters' signals. In audio electronics, filter networks called crossover networks are used to divert low audio signals to woofers, middle-range frequencies to midrange speakers, and high frequencies to tweeters. The list of filter applications is extensive. There are two filter types covered in this chapter, namely, passive filters and active filters. Passive filters are designed using passive elements (e.g., resistors, capacitors, and inductors) and are most responsive to frequencies between around 100 Hz and 300 MHz. (The lower frequency limit results from the fact that at low frequencies the capacitance and inductance values become exceedingly large, meaning prohibitively large components are needed. The upper frequency limit results from the fact that at high frequencies parasitic capacitances and inductances wreak havoc.)

When designing passive filters with very steep attenuation fall off responses, the number of inductor and capacitor sections increases. As more sections are added to get the desired response, the greater is the chance for signal loss to occur. Also, source and load impedances must be taken into consideration when designing passive filters. Active filters, unlike passive filters, are constructed from op amps, resistors, and capacitors— no inductors are needed. Active filters are capable of handling very low frequency signals (approaching 0 Hz), and they can provide voltage gain if needed (unlike passive filters). Active filters can be designed to offer comparable performance to LC filters, and they are

typically easier to make, less finicky, and can be designed without the need for large-sized components. Also, with active filters, a desired input and output impedance can be provided that is independent of frequency. One major drawback with active filters is a relatively limited high-frequency range. Above around 100 kHz or so, active filters can become unreliable (a result of the op amp's bandwidth and slew-rate requirements). At radiofrequencies, it is best to use a passive filter.

5.1.1 Types of filter

Electronic filters are electronic circuits which perform signal processing functions, specifically to remove unwanted frequency components from the signal, to enhance wanted ones, or both. Electronic filters can be:

- passive or active
- analog or digital
- High-pass, low-pass, band pass, band-reject (band reject; notch), or all-pass.
- discrete-time (sampled) or continuous-time
- linear or non-linear
- infinite impulse response (IIR type) or finite impulse response (FIR type)

The most common types of electronic filters are linear filters, regardless of other aspects of their design.

5.1.2 Frequency Response Curve

Frequency response is the quantitative measurement of a system or device's output spectrum in reaction to a stimulus and is used to characterize the system's dynamics. It is a measure of the magnitude and stage of the output as a function of the input frequency. In the easiest possible times, if a sine wave is introduced into a system at a specified frequency, a linear system with a certain magnitude and phase angle relative to the input will react at that same frequency.

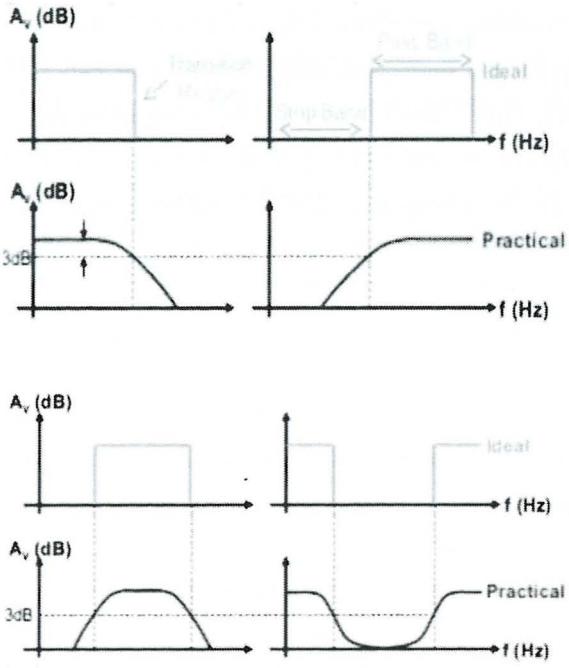

According to the Frequency Response Curve behind, it shows that;

Pass Band: The range of frequency seen in the filter output. Has the same meaning as the bandwidth (BW) of the filter.

Stop Band: The range of frequency blocked by the filter. These frequency are not see in the filter output.

Transition region: The frequency between the pass band and the stop band.

Cut off Frequency: The highest or lowest frequency that is allowed to pass or determines the pass band. The cut off frequency of real filter is the -3dB frequency of that filter.

5.1.3 Decibel (dB)

It is a relative power unit. At audio frequencies a change of one decibel (dB) is just detectable as a change in loudness under ideal condition. For a given power ratio the decibel change is calculated as;

$$dB = 20 \log \frac{Vout}{Vin}$$

$$dB = 20 \log Av$$

Which is, Av = Gain of Active Filter

5.1.4 Cut-Off Frequency

In electronics, cut-off frequency (fc) is the frequency at which the gain on a frequency at which the gain on a frequency response plot is 3 dB less than at mid band gain. The cut off frequency often called -3dB frequencies and its also called knee frequency, due to a frequency response curve's physical appearance.

5.2 PASSIVE FILTER

Passive implementations of linear filters are based on combinations of resistors (R), inductors (L) and capacitors (C). These types are collectively known as passive filters, because they do not depend upon an external power supply and/or they do not contain active components such as transistors.

A passive filter has several advantages over an active filter:

- Guaranteed stability
- Passive filters scale better to large signals (tens of amperes, hundreds of volts), where active devices are often impractical
- No power consumption.
- May be less expensive in discrete designs (unless large coils are required)
- For linear filters, may be, more linear than filters including active (and therefore non-linear) elements, depending on components required.

They are commonly used in speaker crossover design (due to the moderately large voltages and currents, and the lack of easy access to power), filters in power distribution networks (due to the large voltages and currents), power supply bypassing (due to low cost, and in some cases, power requirements), as well as a variety of discrete and home brew circuits (for low-cost and simplicity). Passive filters are uncommon in monolithic integrated circuit design, where active devices are inexpensive compared to resistors and capacitors, and inductors are prohibitively expensive. Passive filters are still found,

however, in hybrid integrated circuits. Indeed, it may be the desire to incorporate a passive filter that leads the designer to use the hybrid format.

5.2.1 Operation of Passive Filters

Inductors block high-frequency signals and conduct low-frequency signals, while capacitors do the reverse. A filter in which the signal passes through an inductor, or in which a capacitor provides a path to ground, presents less attenuation to low-frequency signals than high-frequency signals and is a *low-pass filter.* If the signal passes through a capacitor, or has a path to ground through an inductor, then the filter presents less attenuation to high-frequency signals than low-frequency signals and is a *high-pass filter.* Resistors on their own have no frequency-selective properties, but are added to inductors and capacitors to determine the *time-constants* of the circuit, and therefore the frequencies to which it responds.

The inductors and capacitors are the reactive elements of the filter. The number of elements determines the order of the filter. In this context, an LC tuned circuit being used in a band-pass or band-stop filter is considered a single element even though it consists of two components. At high frequencies (above about 100 megahertz), sometimes the inductors consist of single loops or strips of sheet metal, and the capacitors consist of adjacent strips of metal. These inductive or capacitive pieces of metal are called stubs.

5.2.2 Passive High Pass Filter

The reactance of the capacitor is very high at low frequencies so the capacitor acts like an open circuit and blocks any input signals at Vin until the cut-off frequency point (fc) is reached. Above this cut-off frequency point the reactance of the capacitor has

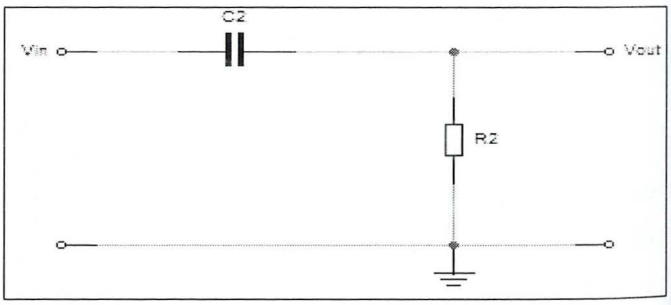

Figure 5.1: 1st order Passive High Pass Filter Circuit

reduced sufficiently as to now act more like a short circuit allowing the entire input signal to pass directly to the output.

a) Operation of Passive High Pass Filter:

At low frequency (Below the cut-off frequency point),

- Xc is very high so the capacitor acts like an open circuit and blocks any input signals at Vin until the cut-off frequency point (fc) is reached.

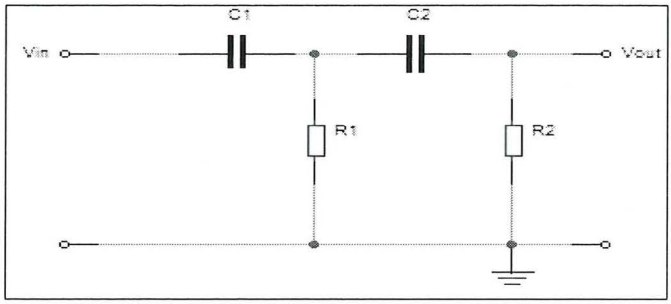

Figure 5.2: 2nd order Passive High Pass Filter Circuit

- Vo = 0
- @ Vo = <<<< (very, very small)

At high frequency (Above the cut-off frequency point)

- Xc is very small so the capacitor act more like a short circuit allowing all of the input signal to pass directly to the output.
- Vout = Vin

b) Frequency Response:

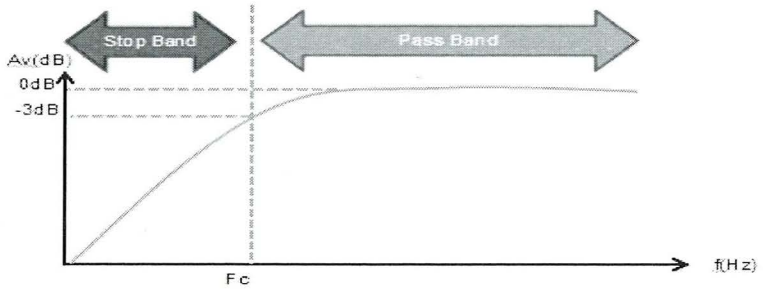

Figure 5.3: Frequency Response of Passive High Pass Filter Circuit

c) Cut off Frequency:

For 1st Order High Pass Filter $$fc = \frac{1}{2\pi RC}$$

For 2nd Order High Pass Filter $$fc = \frac{1}{2\pi\sqrt{R_1R_2C_1C_2}}$$

d) Applications of Passive High Pass Filter:

A very common application of a passive high pass filter, is in audio amplifiers as a coupling capacitor between two audio amplifier stages and in speaker systems to direct the higher frequency signals to the smaller "tweeter" type speakers while blocking the lower bass signals or are also used as filters to reduce any low frequency noise or "rumble" type distortion. When used like this in audio applications the high pass filter is sometimes called a "low-cut", or "bass cut" filter.

5.2.3 Passive Low Pass Filter

A low-pass filter is a filter that **passes low-frequency signals but attenuates** (reduces the amplitude of) signals with frequencies higher than the cutoff frequency. The actual amount of attenuation for each frequency varies from filter to filter. It is sometimes called a high-cut filter, or treble cut filter when used in audio applications. A low-pass filter is the opposite of a high-pass filter. A band-pass filter is a combination of a low-pass and a high-pass.

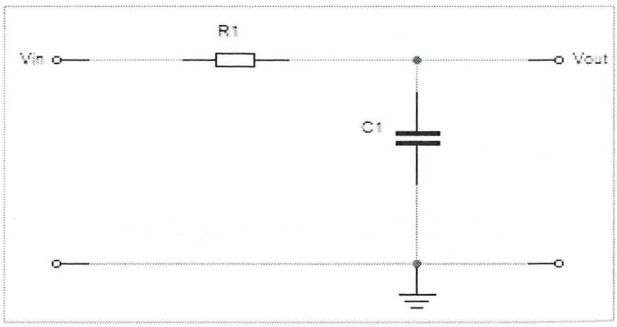

Figure 5.4: 1st Order Passive Low Pass Filter

Low-pass filters exist in many different forms, including electronic circuits (such as a hiss filter used in audio), anti-aliasing filters for conditioning signals prior to analog-to-digital conversion, digital filters for smoothing sets of data, acoustic barriers, blurring of images, and so on. The moving average operation used in fields such as finance is a particular kind of low-pass filter, and can be analyzed with the same signal processing techniques as are used for other low-pass filters. Low-pass filters provide a smoother form of a signal, removing the short-term fluctuations, and leaving the longer-term trend.

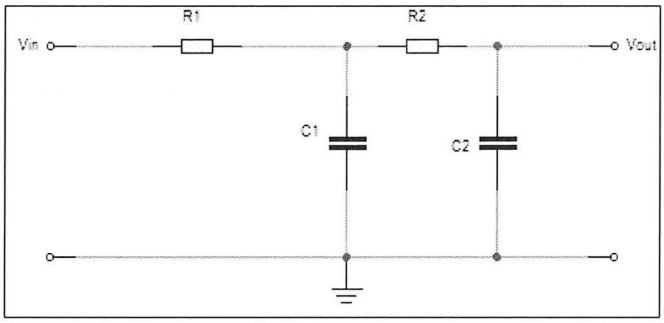

Figure 5.5: 2nd Order Passive Low Pass Filter

Basically, an electrical filter is a circuit that can be designed to modify, reshape or reject all unwanted frequencies of an electrical signal and accept or pass only those signals wanted by the circuits designer. In other words they "filter-out" unwanted signals and an ideal filter will separate and pass sinusoidal input signals based upon their frequency. In low frequency applications (up to 100kHz), passive filters are usually made from simple RC (Resistor-Capacitor) networks while higher frequency filters (above 100kHz) are usually made from RLC (Resistor-Inductor-Capacitor) components.

Passive filters are made up of passive components such as resistors, capacitors and inductors and have no amplifying elements (transistors, op-amps, etc.) so have no signal gain, therefore their output level is always less than the input. Filters are named according to the frequency of signals they allow to pass through them. There are Low-pass filters that allow only low frequency signals to pass, High-pass filters that allow only high frequency signals to pass through, and Band-pass filters that allow signals falling within a certain frequency range to pass through. Simple First-order passive filters (1st order) can be made by connecting together a single resistor and a single capacitor in series across an input signal, (Vin) with the output of the filter, (Vout) taken from the

junction of these two components. Depending on which way around we connect the resistor and the capacitor with regards to the output signal determines the type of filter construction resulting in either a Low Pass Filter or a High Pass Filter.

A Low Pass Filter can be a combination of capacitance; inductance or resistance intended to produce high attenuation above a specified frequency and little or no attenuation below that frequency. The frequency at which the transition occurs is called the "cutoff" frequency. The simplest low pass filters consist of a resistor and capacitor but more sophisticated low pass filters have a combination of series inductors and parallel capacitors.

A simple passive Low Pass Filter or LPF, can be easily made by connecting together in series a single Resistor with a single Capacitor as shown below. In this type of filter arrangement the input signal (Vin) is applied to the series combination (both the Resistor and Capacitor together) but the output signal (Vout) is taken across the capacitor only. This type of filter is known generally as a "first-order filter" or "one-pole filter", why first-order or single-pole?, because it has only "one" reactive component in the circuit, the capacitor. We know that the capacitive reactance of a capacitor in an AC circuit is given as:

$$Xc = \frac{1}{2\pi fC}$$

Opposition to current flow in an AC circuit is called impedance, symbol Z and for a series circuit consisting of a single resistor in series with a single capacitor, the circuit impedance is calculated as: $Z = \sqrt{Xc^2 + R^2}$

Then by substituting our equation for impedance above into the resistive potential divider equation gives us:

$$Vout = Vin\ x\ \frac{Xc}{\sqrt{R^2 + Xc^2}} = Vin\frac{Xc}{Z}$$

a) **Operation of Passive Low Pass Filter:**

At low frequency (Below the cut-off frequency point);

The capacitive reactance, (Xc) of the capacitor will be very large compared to the resistive value of the resistor, R and as a result the voltage across the capacitor, Vc will also be large while the voltage drop across the resistor, Vr will be much lower.

Vout = Vin

Av = Vout/Vin = 1

Gain in db = 20 log10 1 = 0 db

At high frequency (Above the cut-off frequency point);

The reverse is true with Vc being small and Vr being large.

Vo = 0 @ Vo <<< Vin

b) **Frequency Response:**

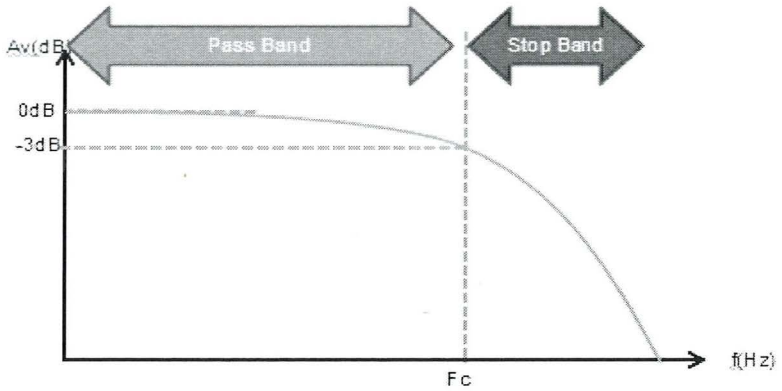

Figure 5.6: Frequency Response of Passive Low Pass Filter Circuit

c) Cut off Frequency

For 1st Order High Pass Filter $$fc = \frac{1}{2\pi RC}$$

For 2nd Order High Pass Filter $$fc = \frac{1}{2\pi\sqrt{R_1R_2C_1C_2}}$$

d) Applications of Passive Low Pass Filter

Applications of **passive Low Pass Filters** are in audio amplifiers and speaker systems to direct the lower frequency bass signals to the larger bass speakers or to reduce any high frequency noise or "hiss" type distortion. When used like this in audio applications the low pass filter is sometimes called a "high-cut", or "treble cut" filter.

5.2.4 Passive Band Pass Filter

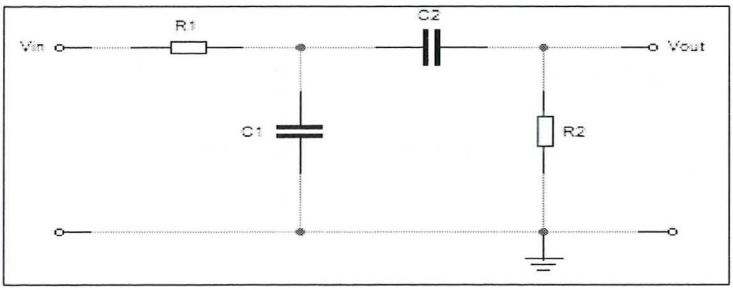

Figure 5.7 : 1st Order Passive Band Pass Filter

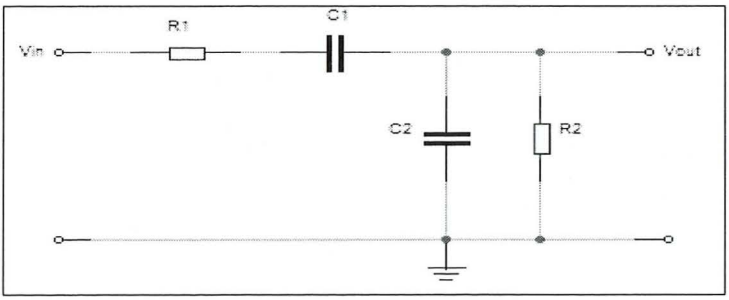

Figure 5.8 : 2nd Order Passive Band Pass Filter

a) Circuit Operation

At low frequency, which is the input frequency less than band pass frequency, the filter will act as a high pass filter. Whereas the capacitor, **C1 will act as short circuit** (Figure 5.9).

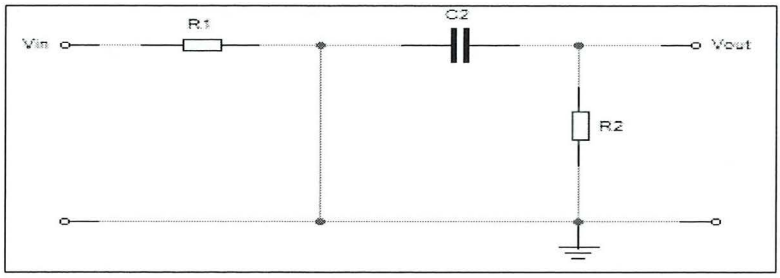

Figure 5.9 : Passive Band Pass Filter when Low Input Frequency

While, at high input frequency (higher than the cut off frequency), the filter will act as low pass filter, with capacitor, **C2 act as short circuit** (Figure 5.10).

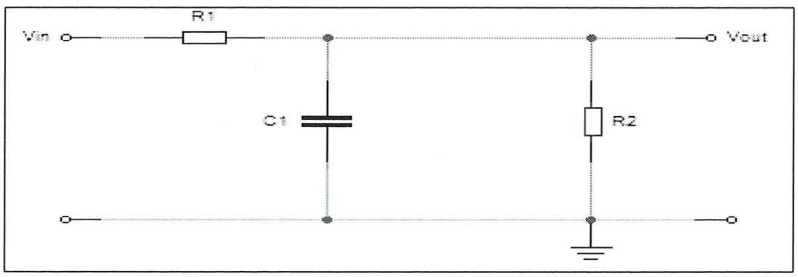

Figure 5.10 : Passive Band Pass Filter when High Input Frequency

b) Frequency Response

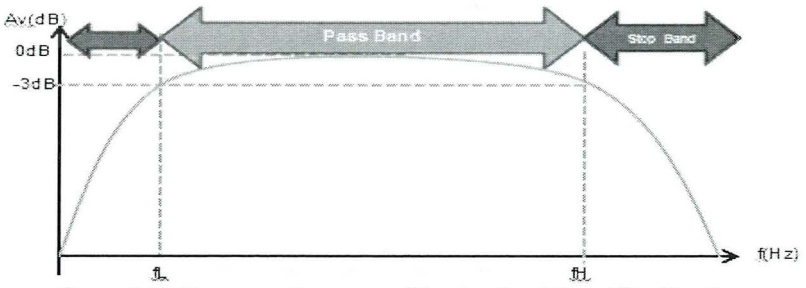

Figure 5.11: Frequency Response of Passive Band Pass Filter Circuit

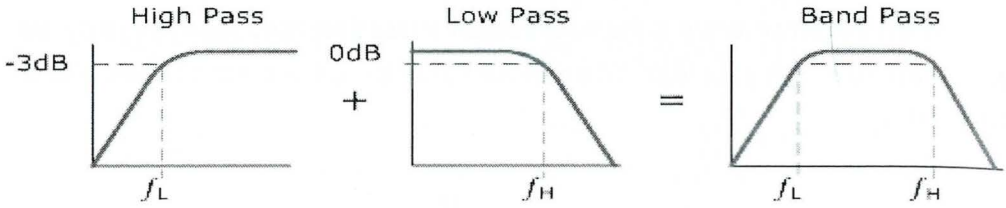

c) Resonant Frequency of Passive Band Pass Filter:

$$f_L = \frac{1}{2\pi R_2 C_2} \qquad f_H = \frac{1}{2\pi R_1 C_1} \qquad f_{r=\sqrt{f_L X f_H}}$$

$$BW = f_H - f_L$$

d) Applications of Passive Band Pass Filter:

One simple use for these types of filters is in audio amplifier applications or circuits such as in loudspeaker crossover filters or pre-amplifier tone controls. Sometimes it is necessary to only pass a certain range of frequencies that do not begin at 0Hz, (DC) or end at some high frequency point but are within a certain frequency band, either narrow or wide.

Band pass filters are used primarily in wireless transmitters and receivers. The main function of such a filter in a transmitter is to limit the bandwidth of the output signal to the minimum necessary to convey data at the desired speed and in the desired form. In a receiver, a band pass filter allows signals within a selected range of frequencies to be heard or decoded, while preventing signals at unwanted frequencies from getting through. A band pass filter also optimizes the signal-to-noise ratio (sensitivity) of a receiver.

5.3 ACTIVE FILTER

Active filters are implemented using a combination of passive and active (amplifying) components, and require an outside power source. Operational amplifiers are

frequently used in active filter designs. These can have high Q factor, and can achieve resonance without the use of inductors. However, their upper frequency limit is limited by the bandwidth of the amplifiers used.

An **active filter** is a type of analog electronic filter, distinguished by the use of one or more active components i.e. voltage amplifiers or buffer amplifiers. Typically this will be a vacuum tube, or solid-state (transistor or operational amplifier).

Active filter circuit configurations (electronic filter topology) include:

- Sallen and Key, and VCVS filters (low dependency on accuracy of the components)
- State variable and biquadratic filters
- Dual Amplifier Bandpass (DABP)
- Wien notch
- Multiple Feedback Filter
- Fliege (lowest component count for 2 opamp but with good controllability over frequency and type)
- Akerberg Mossberg (one of the topologies that offer complete and independent control over gain, frequency, and type)

All the varieties of passive filters can also be found in active filters. Some of them are:

- High-pass filters – attenuation of frequencies below their cut-off points.
- Low-pass filters – attenuation of frequencies above their cut-off points.
- Band-pass filters – attenuation of frequencies both above and below those they allow to pass.
- Notch filters – attenuation of certain frequencies while allowing all others to pass.

Combinations are possible, such as notch and high-pass (in a rumble filter where most of the offending rumble comes from a particular frequency). Another example is elliptic filters.

5.3.1 Active High Pass Filter

Unlike Passive High Pass Filters which have an "infinite" frequency response, the maximum pass band frequency response of an active high pass filter is limited by the characteristics or bandwidth of the operational amplifier being used, making them appear as if they are band pass filters with a high frequency cut-off determined by the selection of op-amp and gain.

a) First Order Active High Pass Filter

A first-order (single-pole) Active High Pass Filter as its name implies, attenuates low frequencies and passes high frequency signals. It consists simply of a passive filter section followed by a non-inverting operational amplifier. The frequency response of the circuit is the same as that of the passive filter, except that the amplitude of the signal is increased by the gain of the amplifier and for a non-inverting amplifier the value of the pass band voltage gain is given as 1 + R2/R1, the same as for the low pass filter circuit.

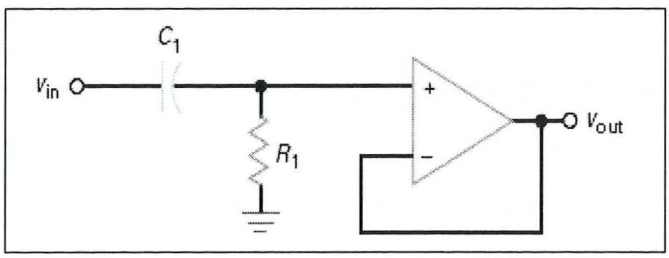

Gain, Av = 1

Cut off Frequency,

$$fc = \frac{1}{2\Pi R1C1}$$

Figure 5.12: Non-Inverting Active High Pass Filter Circuit with Unity Gain

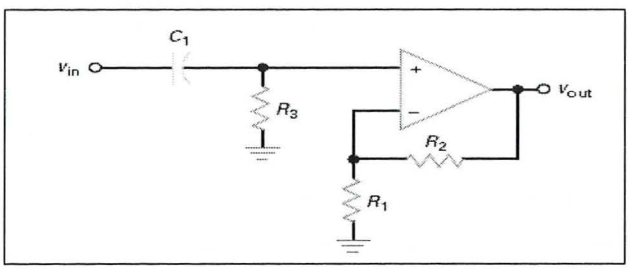

Gain, Av = $1+\frac{R2}{R1}$

Cut off Frequency,

$$fc = \frac{1}{2\Pi R3C1}$$

Figure 5.13: Non-Inverting Active High Pass Filter Circuit with Voltage Gain

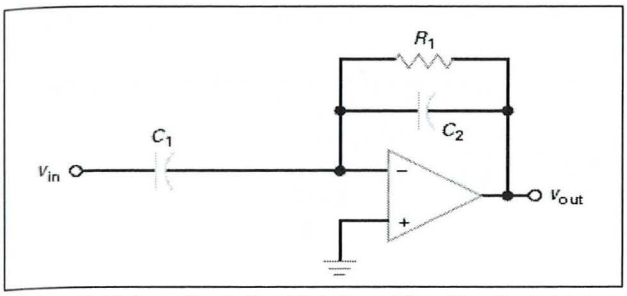

Figure **5.14:** Inverting Active High Pass Filter Circuit with Voltage Gain

$$\text{Gain, Av} = -\frac{C1}{C2}$$

Cut off Frequency,

$$fc = \frac{1}{2\Pi R1C2}$$

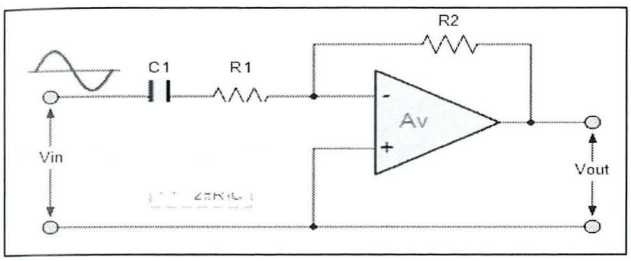

Figure **5.15:** Inverting Active High Pass Filter Circuit with Voltage Gain

$$\text{Gain, Av} = -\frac{R2}{R1}$$

Cut off Frequency,

$$fc = \frac{1}{2\Pi R1C1}$$

b) Second Order Active High Pass Filter

As with the passive filter, a first-order high pass active filter can be converted into a second-order high pass filter simply by using an additional RC network in the input path. The frequency response of the second-order high pass filter is identical to that of the first-order type except that the stop band roll-off will be twice the first-order filters at 40dB/decade (12dB/octave). Therefore, the design steps required of the second-order active high pass filter are the same.

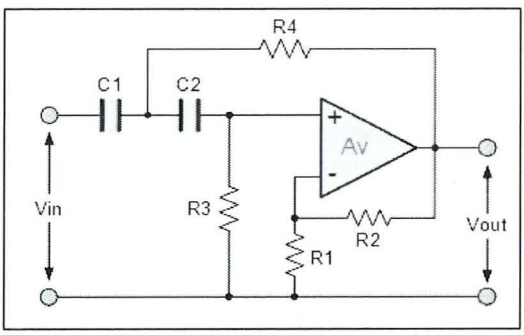

Figure **5.14:** 2nd Order Active High Pass Filter Circuit

$$\text{Gain, Av} = 1+\frac{R2}{R1}$$

$$\text{Cut off Frequency, fc} = \frac{1}{2\Pi\sqrt{R3R4C1C2}}$$

c) Gain of an Active High Pass Filter According to Frequency

$$\textit{Voltage Gain, } Av = \frac{Vout}{Vin} = \frac{A_F\left[\frac{f}{fc}\right]}{\sqrt{1+\left(\frac{f}{fc}\right)^2}}$$

Where:

AF = the pass band gain of the filter, (1 + R2/R1)

f = the frequency of the input signal in Hertz, (Hz)

fc = the cut-off frequency in Hertz, (Hz)

Thus, the operation of a high pass active filter can be verified from the frequency gain equation above as:

1. At very low frequencies, $f < fc$, $\frac{Vout}{Vin} < A_F$

2. At the cut-off frequency, $f = fc$, $\frac{Vout}{Vin} = \frac{A_F}{\sqrt{2}} = 0.707 A_F$

3. At very high frequencies, $f > fc$, $\frac{Vout}{Vin} = A_F$

Then, the Active High Pass Filter has a gain AF that increases from 0Hz to the low frequency cut-off point, fC at 20dB/decade as the frequency increases. At fC the gain is 0.707*AF, and after fC all frequencies are pass band frequencies so the filter has a constant gain AF with the highest frequency being determined by the closed loop bandwidth of the op-amp.

d) Cut Off Frequency of Active High Pass Filter

While, the cut off frequency (fc) of Active High Pass Filter is

$$fc = \frac{1}{2\pi RC}$$

e) Frequency Response Curve

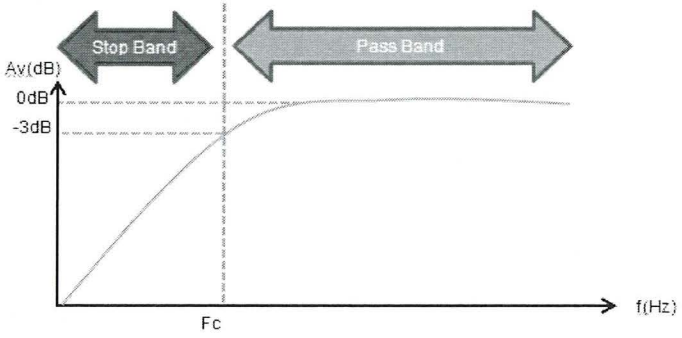

Figure 5.16: Frequency Response of Active High Pass Filter

5.3.2 Active Low Pass Filter

The Active Low Pass Filter is the most prevalent and readily understood active filter. Its operating and frequency response principle is precisely the same as for the passive filter earlier seen, the only distinction this time is that it utilizes an op-amp for amplification and gain control. The easiest type of an active low-pass filter is to link an inverting or non-inverting amplifier to the fundamental RC low-pass filter circuit as shown below.

a) First Order Active Low Pass Filter

This first-order low pass active filter, consists simply of a passive RC filter stage providing a low frequency path to the input of a non-inverting operational amplifier. The

advantage of this configuration is that the op-amps high input impedance prevents excessive loading on the filters output while its low output impedance prevents the filters cut-off frequency point from being affected by changes in the impedance of the load.

While this configuration provides good stability to the filter, its main disadvantage is that it has no voltage gain above one. However, although the voltage gain is unity the power gain is very high as its output impedance is much lower than its input impedance. Here are the first order of the Low Pass active filter circuits.

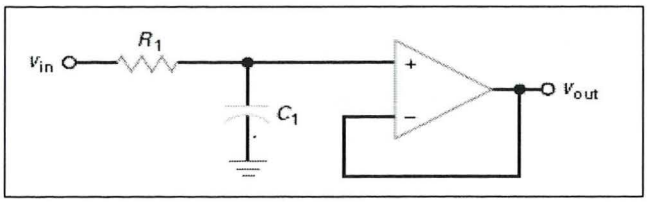

Gain, Av = 1

Cut off Frequency,

$$fc = \frac{1}{2\Pi R1C1}$$

Figure 5.14: Non-Inverting Active Low Pass Filter Circuit with Unity Gain

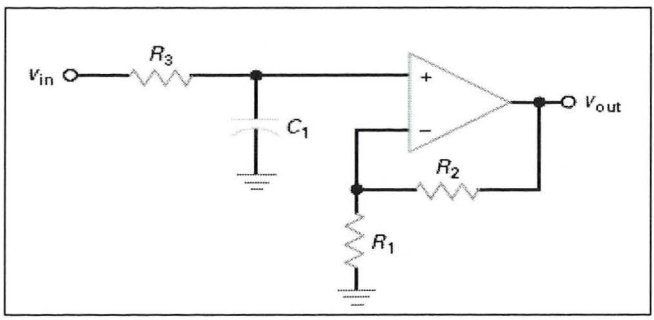

Gain, Av = $1+\frac{R2}{R1}$

Cut off Frequency,

$$fc = \frac{1}{2\Pi R3C1}$$

Figure 5.15: Non-inverting Active Low Pass Filter Circuit with Voltage Gain

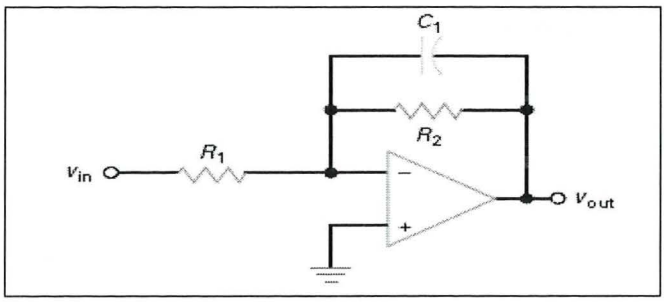

Gain, Av = $-\frac{R2}{R1}$

Cut off Frequency,

$$fc = \frac{1}{2\Pi R2C1}$$

Figure 5.16: Inverting Active Low Pass Filter Circuit with Voltage Gain

The frequency response of the circuit will be the same as that for the passive RC filter, except that the amplitude of the output is increased by the pass band gain, AF of the amplifier. For a non-inverting amplifier circuit, the magnitude of the voltage gain for the filter is given as a function of the feedback resistor (R2) divided by its corresponding input resistor (R1) value and is given as:

For Non – inverting Circuit ;

$$DcGain = 1 + \frac{R2}{R1}$$

For Inverting Circuit ;

$$DcGain = -\frac{R2}{R1}$$

b) Second Order Active Low Pass Filter

As with the passive filter, by simply using an additional RC network in the input path, a first-order low-pass active filter can be converted into a second-order low-pass filter. The second-order low-pass filter's frequency response is identical to that of the first-order form except that the roll-off stop band will be twice the 40dB / decade (12dB / octave) first-order filters. Thus, the design steps required by the active low pass filter in the second order are the same.

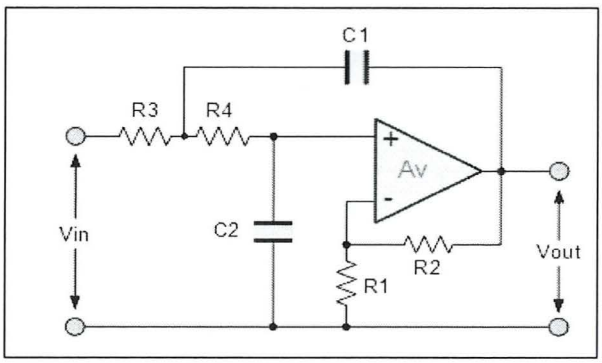

Figure 5.14: 2nd Order Active High Pass Filter Circuit

c) Gain of an Active Low Pass Filter According to Frequency

$$\textbf{Voltage Gain, } Av = \frac{Vout}{Vin} = \frac{A_F}{\sqrt{1 + \left(\frac{f}{fc}\right)^2}}$$

Where:

AF = the pass band gain of the filter, (1 + R2/R1)

f = the frequency of the input signal in Hertz, (Hz)

fc = the cut-off frequency in Hertz, (Hz)

Thus, the operation of a low pass active filter can be verified from the frequency gain equation above as:

1. At very low frequencies, $f < f$c, $\frac{Vout}{Vin} \cong A_F$
2. At the cut-off frequency, $f = f$c, $\frac{Vout}{Vin} = \frac{A_F}{\sqrt{2}} = 0.707 A_F$
3. At very high frequencies, $f > f$c, $\frac{Vout}{Vin} < A_F$

d) Cut Off Frequency

While, the cut off frequency, fc of Active Low Pass Filter is

$$fc = \frac{1}{2\pi RC}$$

e) Frequency Response Curve

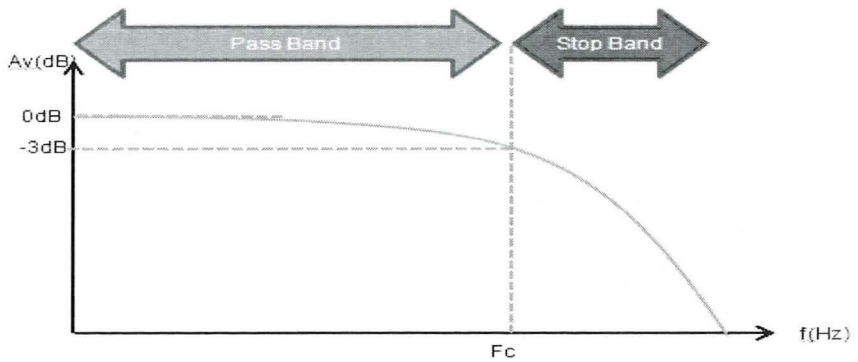

Figure 5.15: Frequency Response of Active Low Pass Filter Circuit

f) Applications of Active Low Pass Filter

Applications of Active Low Pass Filters are in audio amplifiers, equalizers or speaker systems to direct the lower frequency bass signals to the larger bass speakers or to reduce any high frequency noise or "hiss" type distortion. When used like this in audio applications the active low pass filter is sometimes called a "Bass Boost" filter.

5.3.3 Active Band Pass Filter

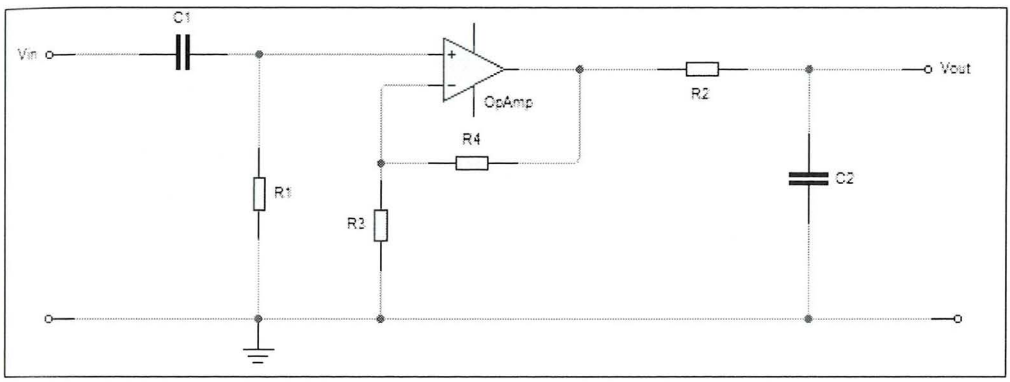

Figure 5.16: 1st Order Active Band Pass Filter

This cascading together of the individual low and high pass passive filters produces a low "Q-factor" type filter circuit which has a wide pass band. The first stage of the filter will be the high pass stage that uses the capacitor to block any DC biasing from the source. This design has the advantage of producing a relatively flat asymmetrical pass band frequency response with one half representing the low pass response and the other half representing high pass response as shown.

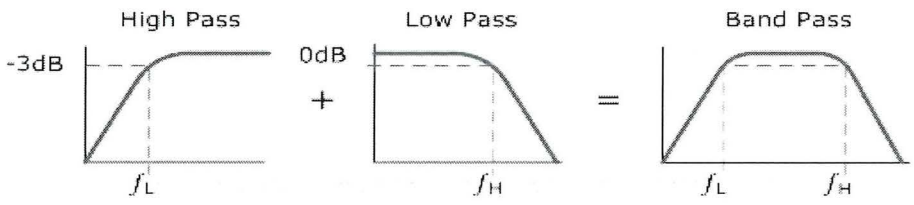

The higher corner point (fH) as well as the lower corner frequency cut-off point (fL) are calculated the same as before in the standard first-order low and high pass filter circuits. Obviously, a reasonable separation is required between the two cut-off points to prevent any interaction between the low pass and high pass stages. The amplifier provides isolation between the two stages and defines the overall voltage gain of the circuit. The bandwidth of the filter is therefore the difference between these upper and lower -3dB points. For example, if the -3dB cut-off points are at 200Hz and 600Hz then the bandwidth of the filter would be given as: Bandwidth (BW) = 600 - 200 = 400Hz.

a) Resonant Frequency of Active Band Pass Filter:

$$f_L = \frac{1}{2\pi R_2 C_2}; \quad f_H = \frac{1}{2\pi R_1 C_1}; \quad f_{r=\sqrt{f_L X f_H}}; \quad BW = f_{H-} f_L$$

b) Frequency Response

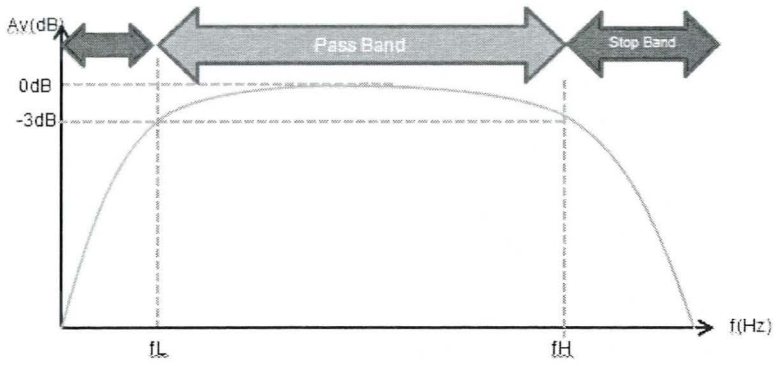

Figure 5.17: Frequency Response of Active Band Pass Filter Circuit

5.4 ADVANTAGES OF ACTIVE FILTERS OVER PASSIVE FILTERS

There are some advantages of active filters compared to passive filters. As explain before, an active filters are using Operational Amplifier in the circuit while passive filters are not. Here are the advantages of active filters;

- All the elements along with op-amp can be used in the integrated form. Hence there is reduction in size and weight.
- The op-amp gain can be easily controlled in the closed loop fashion hence active filter input signals is not attenuated.
- The op-amp has high input impedance and low output impedance, hence the active filters using op-amp do not cause loading of the source or load.
- The finite bandwidth of the active devices places a limit on the highest frequency of operation.
- A reasonably good filter performance can be achieved approximately up to 500 kHz as against this passive filters can be used up to 500MHz.
- The active elements are more sensitive to the temperature and environmental changes than the passive elements.

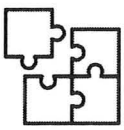

5.5 PRACTICES

Multiple Choice Questions

1. Explain the cut off, fc.
   a. The frequency point of zero up to a certain frequency limit.
   b. The frequency point where the capacitive reactance and resistance are equal and the output signal is attenuated to 70.7% or -3dB of the input signal.
   c. The frequency point limit up to the highest frequency possible.
   d. The frequency point where the capacitive reactance and resistance is not equal and the output signal is attenuated to 70.7% or -3dB of the input signal.

2. Identify the frequency response curve for a band pass filter.

a.

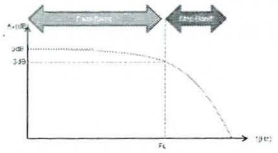

b.

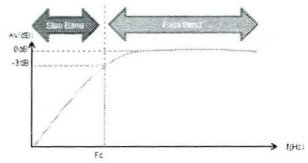

c.

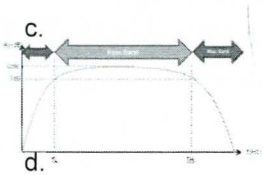

d.

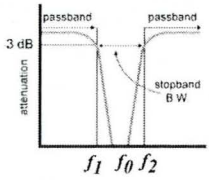

3. A low pass filter has a cut off frequency of 123kHz. Determine the bandwidth of the filter.
   a. 2.46kHz
   b. 1.23kHz
   c. 644 Hz
   d. 123 Hz

4. What is the type of filter circuit shown below.
   a. Low pass filter
   b. High pass filter
   c. Band pass filter
   d. Notch Filter

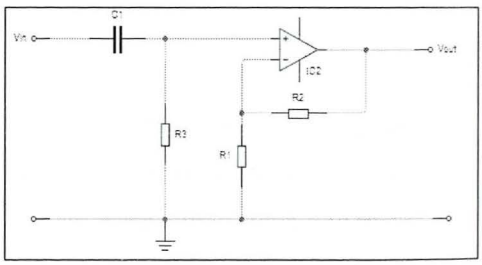

5. Choose the filter that can be used to select a signal of one particular radio station.
   a. Low pass filter
   b. High pass filter
   c. Band pass filter
   d. Band stop filter

Structure Questions

1. a. Identify a schematic diagram for active high pass filter.
   b. Sketch completely the frequency response curve for Passive Low Pass filter and Passive Band Pass Filter.
   c. Given R=47kΩ and C=220pF. Draw the Passive Low Pass Filter circuit and calculate the cut off frequency for this filter.

2. a. Identify the frequency response curve for a band pass filter, high pass filter and low pass filter.
   b. List **THREE (3)** difference between Active Filter and Passive Filter.
   c. A Low pass filter circuit consisting of a resistor of 4.7kΩ in series with a capacitor of 47nF is connected across to 20V sinusoidal supply. Calculate the output voltage, Vout at a frequency of 200Hz and 200 kHz.

CHAPTER 6

DA / AD CONVERTER

6.1 INTRODUCTION

In this chapter DA / AD converter, we have categorized electrical signal as analog (continuous) or digital (discrete). An analog signal is defined as a continuous function in time with a continuous such as voltage, current, pressure and temperature. To use a digital computer or microcomputer for computation and subsequent signal processing, these analog signals are coded as a binary digital signal by means of an *analog to digital (A/D) converter.* Digital signals are also closely related to binary numbers. You can see examples of both of these signals in Figure 6.1.



Figure 6.1 : Comparison Digital and Analog Signal

Digital signal Processing (DSP) in Figure 6.2, an ADC converts the analog data collected by audio input equipment such as a microphone, into a digital signal that can be processed by a computer. The computer may add sound effects. Now a DAC will process the digital sound signal back into the analog signal that is used by audio output equipment such as a speaker.

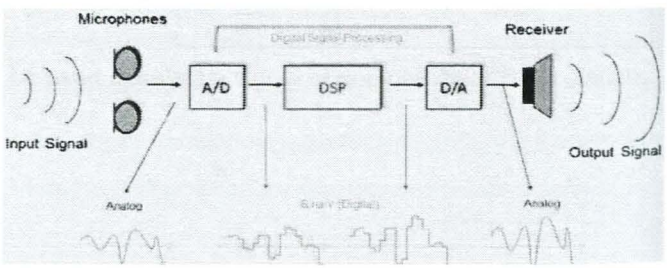

Figure 6.2 : Digital signal Processing (DSP)

6.2 DIGITAL TO ANALOG CONVERTER

DAC function is to change a digital input to analog output, you can see the block diagram of the DAC as shown in Figure 6.3. A binary input d_1, d_2....d_n is converted to an analog voltage. n show number of bit for digital input. There are a large number application of digital in communication, audio systems and in control of signal generation, programmable controller.

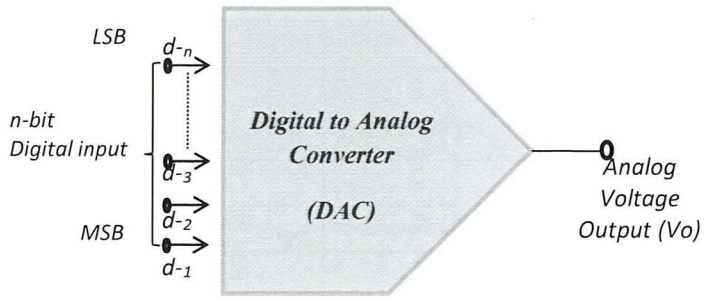

Figure 6.3 : DAC Block Diagram

Figure 6.4 shows the block diagram that contains the DAC with combination of resistor network and summing amplifier circuit. There are two types of DAC circuit, which is a difference in the resistor network circuit. Two types of resistor network circuits, the first is a binary weighted resistor network where the value of the resistor by weight of the binary number. A second resistor network is R/2R ladder, where the value of the resistor-resistor used is R and 2R only.

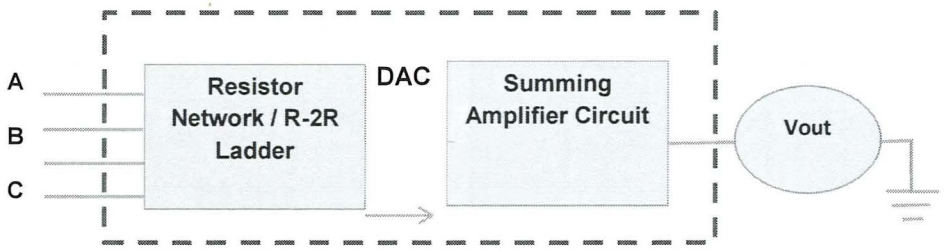

Figure 6.4: Block Diagram for DAC combination Resistor Network and Summing Amplifier

6.2.1 RESISTOR WEIGHT BINARY

The circuit in Figure 6.5 is a digital to analog converter circuit of resistors 4-bit binary weights. We can calculate the resistor values using the weight of binary numbers. For example: Referring to Figure 6.5, the most high-value resistors RA= 80KΩ is a digital input resistor the smallest bit (least significant bit), the smallest resistor value RD=10KΩ is the greatest bit (most significant bit), and the values of the other resistor is;

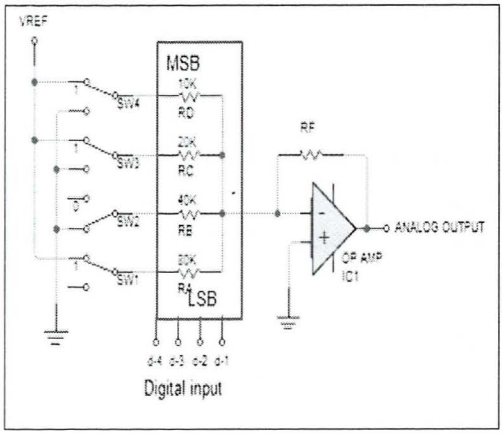

$$RA = 80K\Omega$$

$$RB = \frac{RA}{2^1} = \frac{80K\Omega}{2^1} = 40K\Omega$$

$$RC = \frac{RA}{2^2} = \frac{80K\Omega}{4} = 20K\Omega$$

$$RD = \frac{RA}{2^3} = \frac{80K\Omega}{8} = 10K\Omega$$

Figure 6.5 : 4-bit Resistor Weight Binary Circuit

From the circuit in Figure 6.5, the analog output for resistor weight binary determine by value of VRef and the digital input. Given RF=20KΩ and VRef=5V

Example :For 4 bit binary weights

i . *Input 0001*

Voltage Gain (A_V)= $\frac{RF}{RA} = \frac{20K\Omega}{80K\Omega} = 0.25$

Vout = V_{ref} x A_V = 5v x 0.25 = 1.25V

Example :For 4 bit binary weights

ii . *Input 0011*

$RT_1 = \frac{RA \times RB}{RA + RB} = \frac{80K\Omega \times 40K\Omega}{80K\Omega + 40K\Omega} = 26.67K\Omega$

Voltage Gain ,A_V= $\frac{RF}{RT_1} = \frac{20K\Omega}{26.67K\Omega} = 0.75$

Vout = V_{ref} x A_V = 5v x 0.75 = 3.75V

iii . *Input 0111*

$RT_2 = \frac{1}{RA + RB} + \frac{1}{RC} + \frac{1}{80K\Omega} + \frac{1}{40K\Omega} + \frac{1}{20K\Omega}$
=11.43KΩ
Voltage Gain ,A_V = $\frac{RF}{RT_2} = \frac{20K\Omega}{11.43K\Omega} = 1.75$

Vout = V_{ref} x A_V = 5v x 1.75 = 8.75V

For 4 bit weight binary there are possibility 16 input digital. Where each analog output need to determine by calculate the Vout based on input digital as shown in above example. In summary we can see the resulting output is shown in Table 6.1.

Table 6.1:Output Voltage for 4-Bit Weight Binary

Decimal no	Input Binary				Output Analog V_{out} (V)
	MSB (RD=10KΩ)	(RC=20KΩ)	(RB=40KΩ)	***LSB*** (RA=80KΩ)	
0	0	0	0	0	0.00
1	0	0	0	1	1.25
2	0	0	1	0	2.5
3	0	0	1	1	3.75
4	0	1	0	0	5.00
5	0	1	0	1	6.25
6	0	1	1	0	7.50
7	0	1	1	1	8.75
8	1	0	0	0	10.00
9	1	0	0	1	11.25
10	1	0	1	0	12.50
11	1	0	1	1	13.75
12	1	1	0	0	15.00
13	1	1	0	1	16.25
14	1	1	1	0	17.50
15	1	1	1	1	18.75

6.2.2 R2-R LADDER

The circuit in Figure 6.6 is a digital to analog converter circuit of resistors 4-bit R-2R Ladder. The circuit only uses two resistor value R and 2R. For example: resistor R=10KΩ and resistor 2R=20KΩ. SW1 to SW4 show total of bit = 4 bit input digital. Referring to Figure 6.6, the most significant bit MSB (SW1) is a digital input resistor, the smallest bit least significant bit LSB (SW4).

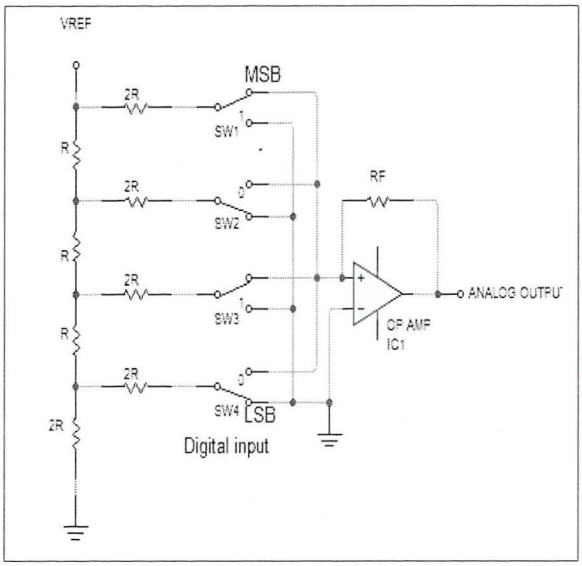

Figure 6.6 : 4 bit R-2R Ladder Circuit

To determine the analog voltage output applied below equation. Given value of VRef is 5V and the digital input from 0000 until 1111. Resistor R=10K and RF=20KΩ.

$$Vout = \frac{\mathbf{V_{ref}}}{\mathbf{2^n}} \times \mathbf{B_{in}} \times \frac{\mathbf{R_f}}{\mathbf{R}}$$

n = *number of bits*

B_{in} = *digital input converted to decimal numbers.*

Example :For 4 bit R-2R Ladder

i . *Input 0011*

$$Vout = \frac{\mathbf{V_{ref}}}{\mathbf{2^n}} \times \mathbf{B_{in}} \times \frac{\mathbf{R_f}}{\mathbf{R}}$$

$$= \frac{5V}{16} \times 3 \times \frac{20K\Omega}{10K\Omega}$$

$$= \mathbf{1.875V}$$

i . *Input 0111*

$$Vout = \frac{\mathbf{V_{ref}}}{\mathbf{2^n}} \times \mathbf{B_{in}} \times \frac{\mathbf{R_f}}{\mathbf{R}}$$

$$= \frac{5V}{16} \times 7 \times \frac{20K\Omega}{10K\Omega}$$

$$= \mathbf{4.375V}$$

For 4 bit R-2R there are also possibility 16 input digital. Where each analog output need to determine by calculate the Vout based on input digital as shown in above example. In summary we can see the resulting output is shown in Table 6.2.

Table 6.2: Output Voltage for 4-Bit R-2R Ladder

Input binary				Analog Output, V_{OUT}
D (SW1)	C (SW2)	B (SW3)	A (SW4)	$Vout = \frac{V_{ref}}{2^n} \times B_{in} \times \frac{R_f}{R}$ $= \frac{5}{2^4}\frac{R}{R}B_{in}$
0	0	0	0	0
0	0	0	1	0.625
0	0	1	0	1.250
0	0	1	1	1.875
0	1	0	0	2.500
0	1	0	1	3.125
0	1	1	0	3.750
0	1	1	1	4.375
1	0	0	0	5.000
1	0	0	1	5.625
1	0	1	0	6.25
1	0	1	1	6.875
1	1	0	0	7.500
1	1	0	1	8.125
1	1	1	0	8.750
1	1	1	1	9.375

6.2.3 SPECIFICATION DIGITAL TO ANALOG CONVERTER

Most of the digital to analog converter can be found in Integrated circuit (IC). It is important that you know some of the features or specifications from the manufacturer for the right application on any circuit. There are five specifications for the DAC, which we discuss.

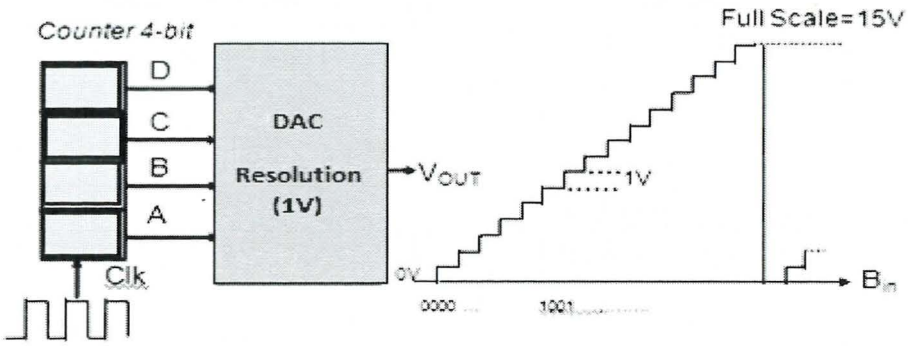

Figure 6.7: 4-bit DAC

Figure 6.7 illustrates the DAC digital input of the counter mode 16. 4-bit DAC has a resolution of 1 V and a maximum output voltage or full-scale voltage of 15 V. Now let us examine the specifications for digital to analog converter.

i. Resolution

Defined as the smallest change achieved in the analog output as a result of changes in digital input. Manufacturers often refer to DAC resolution is the number of bits. For example, 10-bit DAC with 10 bit resolution. 10-bit DAC has a resolution smaller than 8-bit DAC.

Resolution can be expressed in two cases, either the voltage or Ampere and also percent. Resolution in voltage or Ampere is also known as the step size. You can see in Figure 6.7 above, the output waveform versus digital input is shaped like a ladder with rungs of 15 and 16 footing. 15 stairs is known as the number of steps. So the step size or resolution for digital to analog converter in this Figure 6.7 is 1 V.

To your knowledge is often the resolution is equal to the value of the product during the first digital input is 00012.

Resolution = Step size = LSB (for input bit)

% Resolution = $= \frac{step\ size}{full\ scale\ volatge} \times 100$, where;

n = number of input bits, $(2^n - 1)$ = number of steps

Example : Digital to analog converter 8-bit with step size 10 mV. Search for full-scale voltage and percent resolution.

Solution:

Total bit = 8

The total size of the step = 2^8 - 1 = 255 step

So, Full scale voltage = 10mV x 255 = 2.55 V

% resolution = $\frac{step\ size}{full\ scale\ volatge} \times 100 = \frac{10mV}{2.55V} \times 100 = 0.39\%$

Or % resolution = $= \frac{1}{255} \times 100 = 0.39\%$

ii. **Accuracy**

Manufacturer of digital to analog converter has a number of ways to define accuracy. Two of them are often referred Linearity Error and full-scale error. Skill-full of errors =The maximum deviation from the ideally DAC output. Linearity Error = The maximum deviation of the step size is ideal step size.

Example:

4-bit DAC as shown in Figure 6.6 has 0.01% FS accuracy and full-scale DAC is 15V. So 0.01% x 15 = 1.5mV.

This means that the DAC output will be different from the ideal value of 1.5mV.

6.3 ANALOG TO DIGITAL CONVERTER

ADC function is to change an analog input to digital output, you can see the block diagram of the ADC as shown in Figure 6.8. An analog input converted to binary output d_1, d_2....dn. n indicate the number of bit for digital output.

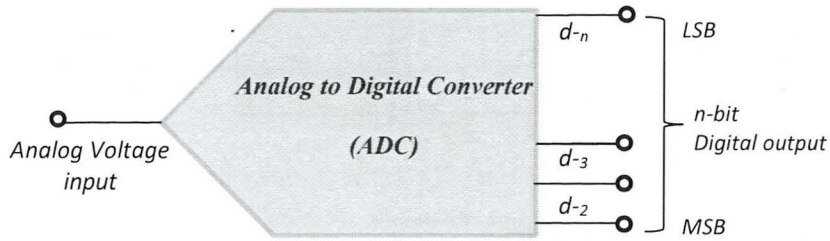

Figure 6.8 : ADC Block Diagram

6.3.1 DIGITAL RAMP CONVERTER (DRC)

Digital Ramp Converter (DRC) as in Figure 6.9 shows an example circuit analog to digital converter (ADC) 4-bit digital ramp. It consists of a voltage comparator, logic control, 4-bit counter circuits and digital to analog converter (DAC). Voltage comparator is used to compare the analog input voltage (VA) and the output voltage (VA') from the DAC.

Control logic circuit used to reset count, when the input is 'START' is given logic high. Counter circuit is used to allow the clock to add a step by step until the output DAC (VA ') greater than or equal to the input analog (VA). This circuit is called a digital ramp ADC for signal VA is a step-by-step (the step-by-step), which is like a ladder.

Tips:
If VA >VA' = comparator 1 (counter will count up)
If VA ≤VA' = comparator 0 (counter will stop count)

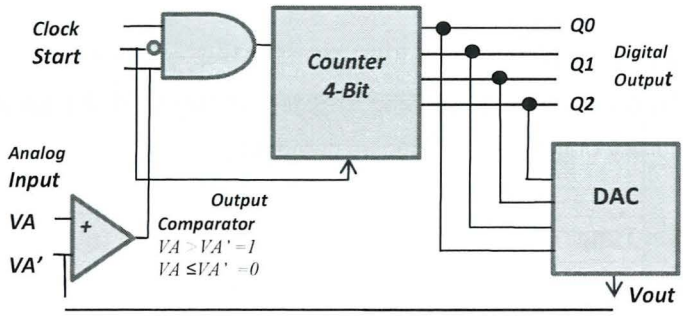

Figure 6.9: Digital Ramp Converter 4-Bit

Example: DRC 4-bit converter using counter circuit with 1V step size was used to convert the input value, VA =5 V. Table 6.3 show the operation of the conversion. The final output digital for conversion ADC with input analog VA=5V is 0101.

Table 6.3: Operation of Analog to Digital DRC

Operation	Input Analog (VA = 5V)	Output DAC (VA') With Step Size = 1V	Output Digital
i) A positive pulse 'Start' is supplied, counters restored to zero. AND gate output is low, so count no receives any triggered bell-shaped.	5V	NA	NA
ii) When the count at zero, VA '= 0, so the output voltage at the comparator is high. When the lower back and triggered pulse at the AND gate output will be high (because all entries are in a logic high) and this allows the counter count.	5V	0V	0000
iii) Output DAC, VA' increases in voltage step corresponding to step size or resolution.	5V	1V	0001
iv) This process will continue until the VA ≤VA'	5V	2V	0010
	5V	3V	0011
	5V	4V	0100
	5V	5V	0101
v) Comparator output will be low, the counter will stop on the count represented by the VA. The conversion process is complete.	5V	NA	NA

Ramp Specifications Digital Converter

- **Resolution and accuracy**

Resolution and accuracy of the analog to digital converter is the same as the resolution and accuracy of the digital to analog converter.

- **TC Conversion Time**

Conversion time is the time taken to convert the analog input of a digital exit. For the digital ramp converters, counters count from 0 to VA '≥ VA. The time for completion of the conversion process, depending on the value of analog input, VA. The greater the value of VA then more steps and longer conversion time. Now we will see the expression for the change to digital converter ramps.

$$Tc(max) = (2^n - 1)\ clk/cyle = total\ step\ X\ T_{input}$$

$T_{C\,(max)}$, *the maximum conversion time occurs when* $V_A \geq V_{FS}$.

$$Tc(ave) = T_{C\,(max)}/\ 2 \approx (2^n - 1)\ clk/cyle$$

6.3.2 SUCCESSIVE APPROXIMATION CONVERTER (SAC)

The *successive approximation converter (SAC)* ADC has both relatively high speed and high resolution with the result that is the most popular of the converters. The advantages of SAC is has a shorter conversion time and a fixed (not dependent on the value of analog input). SAC circuit using the circuit register to provide input to the DAC block where logic controllers ('control logic') alter the contents of the register-to-bit up in the registry data with an analog input, VA (within the resolution of the converter). Figure 6.10 is a block diagram of the successive approximation converter.

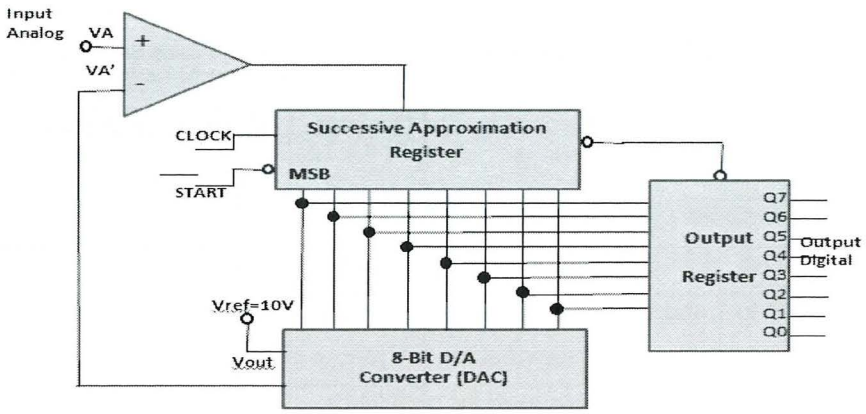

Figure 6.10: Block Diagram of the Successive Approximation Converter.

An n-bit SAC is used to accumulate the output digits as follows. At the beginning of a conversation, the register is cleared. The MSB is set to ONE, causing the DAC to output one half of full scale voltage. If the DAC output larger than the input sample voltage, the MSB is reset, if not it remains set. On the following clock cycle the next MSB is tested, if DAC output from the new approximation exceeds the input voltage then this bit is reset. This testing of each bit proceeds until the LSB has been tested, requiring n clock cycles. The SAC now contains the desired digital representation of the analog voltage. The accuracy of this system depends on the DAC and its reference voltage, as well as on the comparator accuracy.

Tips:
If VA >VA' = comparator 1 (Set MSB to 1)
If VA' >VA = comparator 0 (Reset bit and Set next bit)

Example

SAC 4-bit converter with 1V step size was used to convert the input value, VA = 7.5 V. Table 6.4 show each step of the conversion. The final output digital for conversion ADC with input analog VA=7.5V is 0111.

Table 6.4 : Step of Conversion Process For VA = 7.5 V using SAC 4-Bit

Step	Register	VA' (V)	VA (V)	Comparator
Initial conditions	0000	0	7.5	'1'
Set MSB to '1', *(VA' > VA)*	1000	8	7.5	'0'
Reset bit to 1 and set the next bit, *(VA > VA')*	0100	4	7.5	'1'
Let set the next bit '1', *(VA > VA')*	0110	6	7.5	'1'
Let set the next bit '1', *(VA > VA')*	0111	7	7.5	' 1'
Output of the show **After complete tested each bit until the LSB.*	0111			

Referring to Table 6.4, we have seen that each bit has been tested up to the VA '> VA. But the conversion did not depend on the input; the conversion time is fixed for the SAC.

Time Conversion for Analog to Digital Converter

To make the conversion, an n-bit SAC requires n cycles bell-shaped, without determined by VA. This is because the control circuit will try every bit.

Now let us compare the maximum conversion time Tc for the DRC and SAC 10-bit, given the clock frequency is 500 kHz.

$$f_{in} = \frac{1}{T_{in}} \Rightarrow T_{in} = \frac{1}{f_{in}} = \frac{1}{500k} = 2\mu s$$

For DRC, Tc (mak) = (2n - 1) X (1 clock cycle) = 1023 X 2 μ s = 2046 s.

For SAC, Tc (mak) = n X (1 clock cycle) = 10 X 2 μ s = 20 s.

**Note = From the comparison above we have found that SAC is 100 times faster than the DRC*

6.3.3 DIFFERENCES BETWEEN SAC & DRC

Table 6.5: The difference between successive approximation converter and the converter digital ramp.

SAC	DRC
a) The fixed conversion	a) Time conversion in accordance with Va.
b) Tcmax = n bits x 1 cycle, more speed	b) Tcmak X 1 = number of cycle steps, the higher the longer the conversion of Va
c) circuit using the register	c) Circuit using the counter

6.4 PRACTICES

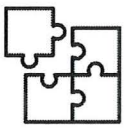

Multiple Choice Questions

1. What is the function of Digital to Analogue Converter (DAC)?
   A. Convert from analogue signal to analogue signal.
   B. Convert from analogue signal to digital signal.
   C. Convert from digital signal to digital signal.
   D. Convert from digital signal to analogue signal.

2. The statement "The smallest changes that can occur in an analogue output signal when the digital input is changed" is refer to
   A. Step size
   B. Resolution
   C. Full scale
   D. Total size

3. A four bit Digital to Analogue converter (DAC) produces an output voltage,Vout = 10mV for a digital input of 0001. Calculate the full scale for the converter.

A. 50mV

B. 100mV

C. 150mV

D. 200mV

4. Identify the converter described in the below statement.

• Using two different value of resistors • Has high accuracy and precision • Converting digital signal to analogue signal.

A. R/2R Ladder

B. Resistor weight binary

C. Digital ramp converter

D. Successive approximation converter

5. This configuration of op Amp and resistor can produce an analogue output voltage equal to the binary input, ABCD shown in Figure 6.10. The voltage levels for logic '0' is represented by 0V and logic '1' is represented by -5V. Calculate the output voltage for an input of 0111 if given R=1KΩ.

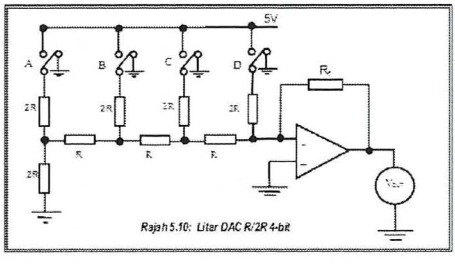

Figure 6.10

A. 1.094V

B. 2.188V

C. 4.375V

D. 8.750V

Essay Questions

1. a. State the function of an analogue to digital converter and list TWO (2) types of its circuits.

   b. Calculate the numbers of steps of an 8 bit analogue to digital converter (ADC) that has the input range from 0-12V. What is the voltage of each steps of the output?

   c. For a 3 bit R-2R ladder DAC in Figure 6.11, when input is 110 with +V=+5V, calculate the value of Va, Vb, Vc and Vout?

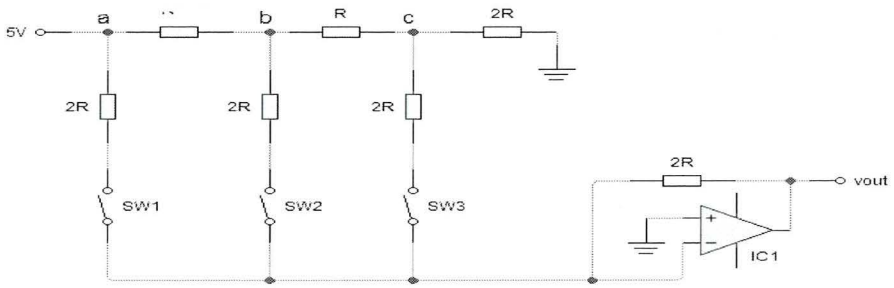

Figure 6.11

2. a. List THREE (3) main parts of Digital Ramp Converter.

   b. Sketch block diagram of a 4-bits DAC with resistor network and summing amplifier. Identify TWO (2) types DAC circuit.

   c. Draw completely the configuration of DAC if R1=18.75KΩ, R2=37.5KΩ, R3=75KΩ and R4=150KΩ, calculate the output voltage for an input of 0111.

ANSWERS

Chapter 1

Multiple Choice Questions

1) D
2) A
3) B
4) C
5) D

Structure Questions

1) 3 types of rectifier:
   - Half wave rectifier
   - Full wave rectifier
   - Bridge Rectifier

2) Operation of serial transistor voltage regulator with the aid of diagram.

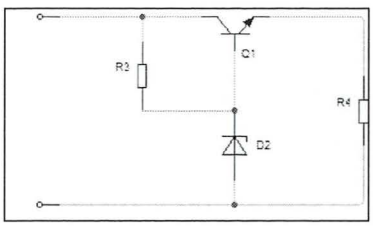

   - Output voltage sampled by a circuit which supplies a feedback voltage and compared to the reference voltage (zener diode will act as a reference voltage).
   - If the output voltage decreases, the increases in the VBE will cause the transistor to produce more than the current flow will increase the output voltage and maintain the output voltage.

- The same process occurs if the output voltage increases, The transistor will reduce the current value, causing the output voltage and maintaining the output voltage decreases.

3) Input and Output waveform of Half wave rectifier

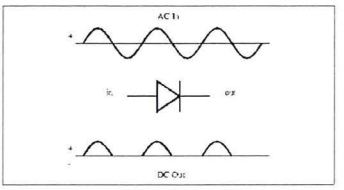

4) Using the suitable block diagram of power supply unit and label each block.

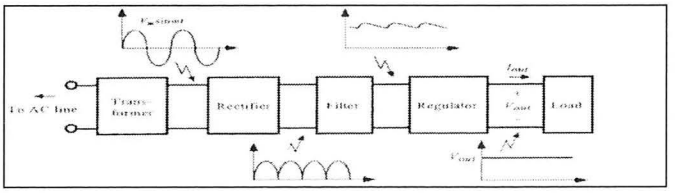

5) Bridge rectifier network

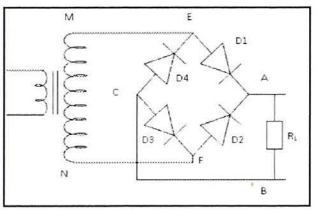

- **Positive Cycle**

When the voltage AC provided on the circuit, the end of M and N on the transformer secondary will be positive and negative in turn. When the input voltage positive cycle is inserted, the terminal M and N be positive to negative. Diodes D1 and D3 to the forward biased, while diode D2 and D4 to reverse bias. Current flows along the M, E, A, B, C, F N. A positive cycle of the wave will be produced at the load.

- **Negative Cycle**

  When the input voltage negative cycle is inserted, the terminal M is negative and N be positive. Diode D2 and D4 to the forward biased, while diode D1 and D3 the reverse biased. Current flows along the N, F, A, B, C, E, M. Since the current flowing through the load RL is equal to the current flowing through the load RL when the positive cycle, we can form the same wavelength.

CHAPTER 2

Multiple Choice Questions

1. B
2. C
3. A
4. C
5. B

Structure Questions

1. Draw the block diagram of an oscillator and name each of the block?

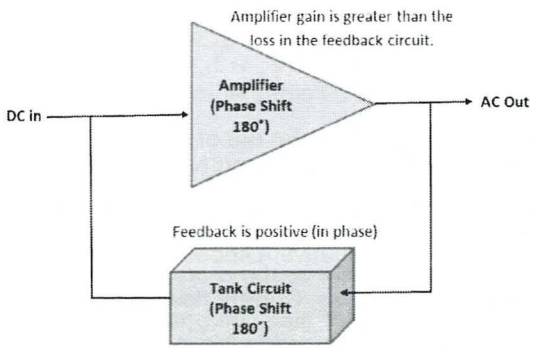

2. Draw the feedback circuit for Hartley Oscillator.

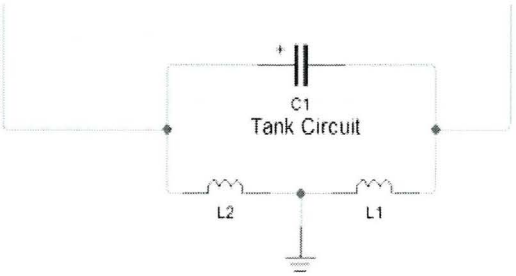

3. State THREE (3) differences between LC oscillator and RC oscillator.

RC Oscillator	LC Oscillator
Component tank circuit Resistor and capacitor	Component tank circuit inductor and capacitor
Generate the audio frequency	Generate the radio frequency
Produce low and middle frequency	Produce high frequency and stable
Low cost	High cost

4.Sketch equivalent circuit of a Crystal oscillator if Rs=700Ω, Ls=0.09H, Cs 0.005pF and Cp=10pF. And calculate the series frequency resonance for the oscillator.

$$fr = \frac{1}{2\pi\sqrt{LsCs}}$$

$$fr = \frac{1}{2\pi\sqrt{(0.09H)(0.005pF)}}$$

$$fr = 7.50MHz$$

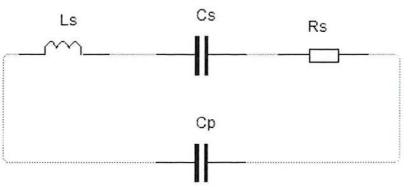

5.Calculate the expected output frequency for the circuit shown in Figure 2.11 below.

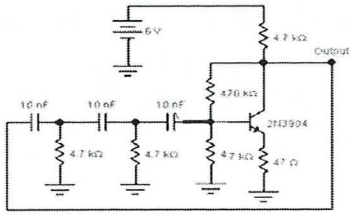

Figure 2.11

$$fr = \frac{1}{2\pi RC\sqrt{2xN}}$$

$$fr = \frac{1}{2\pi(4.7K)(10nF)\sqrt{2x3}}$$

$$fr = 1.38KHz$$

Essay Questions

1. From the circuit in Figure 2.12. Answer question below.

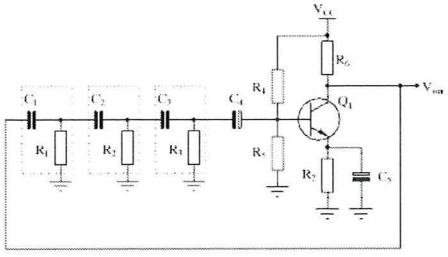

Figure 2.12

a. Name type of the oscillator.

Phase Shift RC oscillator

b. Explain the operation of the circuit.

The output signal from the amplifier phase shift 180° out from the input signal. To generate a positive feedback signal, the output signal phase shifted by 180° should be in phase with the input. RC network produces a phase shift of 180° which each RC network will shift phase by 60° represent by 3 RC networks.

c. Determine value of capacitor if value of frequency oscillation is 10KHZ and resistor is 2KΩ.

$$fr = \frac{1}{2\pi RC\sqrt{2xN}}$$

$$6.5KHz = \frac{1}{2\pi 1KC\sqrt{2x3}}$$

$$6.5KHz = \frac{1}{15.39KxC}$$

$$C = \frac{1}{6.5KHzx15.39K}$$

$$C = \frac{1}{100.04M}$$

$$C = 10nF$$

2. a. Compare what is the different between Colpitt's Oscillator and Hartley Oscillator?

Colpitt's Oscillator	Hartley Oscillator
Tank circuit consist of two capacitor and 1 inductor	Tank circuit consist of one capacitor and two inductor
Frequency oscillation formula $f = \frac{1}{2\pi\sqrt{L C_T}}$	Frequency oscillation formula $fr = \frac{1}{2\pi\sqrt{CL_T}}$

b. Sketch equivalent circuit of a Crystal oscillator if Rs=700Ω, Ls=0.09H, Cs 0.005pF and Cp=10pF. And calculate the series frequency resonance for the oscillator.

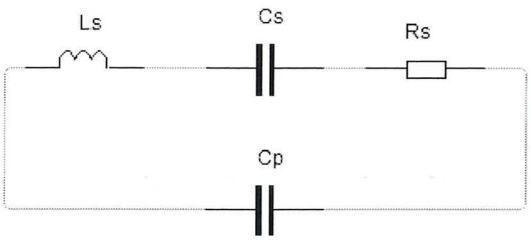

$$f_r = \frac{1}{2\pi\sqrt{L_S C_S}}$$

$$f_r = \frac{1}{2\pi\sqrt{0.09Hx0.005pF}}$$

$$fr = 7.5MHz$$

CHAPTER 3

Multiple Choice Questions

1. B
2. B
3. C
4. C
5. C

Essay Questions

1. Define CMRR:

   CMRR can be define as the ratio of an operational amplifier's differential (closed loop) gain to the common mode gain.

   Closed loop Gain;

   $$Acl = 1 + \frac{Rf}{R1}$$

   $$= 1 + \frac{100k}{15k} = 7.667$$

   Common Mode Rejection Ratio;

   $$CMRR = \frac{A_{CL}}{A_{CM}}$$

   $$= \frac{7.667}{0.01} = 7667$$

   $$= 20\log 7667$$

   $$= 57.69dB$$

2. **THREE (3)** ideal to the practical characteristics

Characteristics	Ideal	Practical
Voltage Gain	Infinite	20000-200000
Input Impedance	Infinite	0.25 MΩ
Output Impedance	Zero	<100 Ω
Bandwidth	Infinite	1 – 20MHz
Input offset voltage gain / common mode gain	Zero	0.000001

CMRR is the ratio of differential voltage gain (Ad) to common mode voltage gain (Acm).

$$\boldsymbol{CMRR} = \frac{Ad\ or\ Acl}{Acm}$$

Closed loop gain, Acl (for non-inverting);

$$Acl = 1 + \frac{Rf}{R1}$$

$$Acl = 1 + \frac{100k}{10k} = 11$$

$$\boldsymbol{CMRR} = \frac{11}{0.001} = 11000$$

3. Non-inverting:

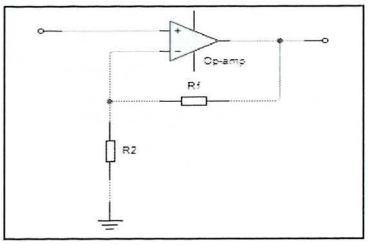

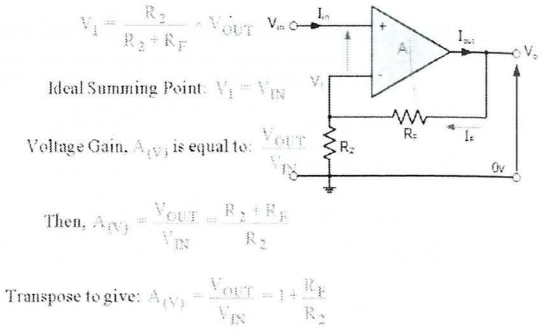

$$Vout = Vin\left(1 + \frac{Rf}{R2}\right)$$

$$Vout = 1m\left(1 + \frac{10k}{5k}\right) = 3mVpp$$

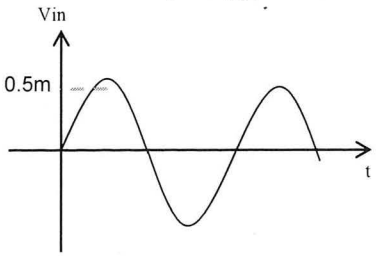

Input waveform

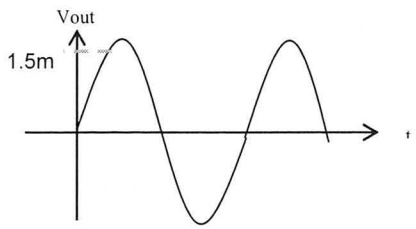

Output waveform

CHAPTER 4

Multiple Choice Questions

1. B
2. C
3. C
4. A
5. C

Essay Questions

1. a. Draw the schematic diagram of the timer 555 with Monostable Mode operation.

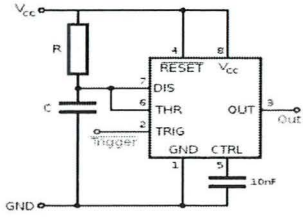

b. Sketch the waveform at pin 2, pin 3 and pin 6.

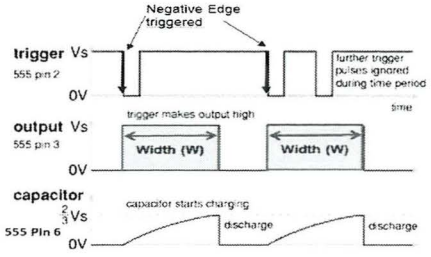

c. Calculate the pulse width if R=2KΩ and C=0.01μF.

width (w) = *1.1RC*

= *1.1 x 1KΩ x 10μF*

= *11ms*

2. a. Draw a Timer Astable Mode Circuit

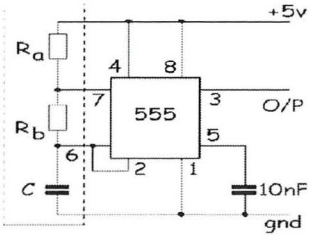

b. Calculate the value of Time High (TH), Time Low (TL), Frequency (F) and Duty Cycle for Timer Astable Mode. Given value RA = 230Ω, RB=75Ω and C=0.1μF for electrolytic and 0.01μF for seramic capacitor.

$$TH = 0.693(RA + RB)C$$

$$TH = 0.693(230+75)0.1\mu$$

$$TH = 21.14\mu s$$

$$TH = 0.693(RB)C$$

$$TH = 0.693(75)0.1\mu$$

$$TH = 5.2\mu s$$

$$f = \frac{1.44}{(RA + 2RB)C}$$

$$f = \frac{1.44}{(230 + 2(75))0.1\mu}$$

$$f = \frac{1.44}{38\mu} = 37.89\text{KHz}$$

$$Duty\ Cycle\ \% = \frac{21.14\mu s}{21.14\mu s + 5.2\mu s} x100\%$$

$$Duty\ Cycle\ \% = \frac{TH}{TH + TL} x100\%$$

$$Duty\ Cycle\ \% = 80.26\%$$

c. Draw the output at Pin 3 and Pin 6

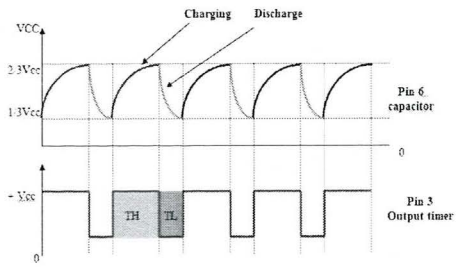

Chapter 5

Multiple Choice Questions

1. B
2. C
3. B
4. B
5. C

Structure Questions

1. a) schematic diagram for active high pass filter

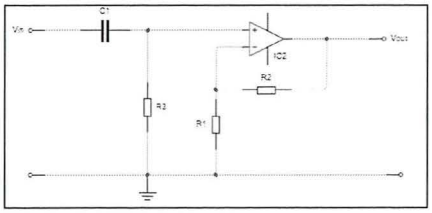

b) Frequency response curve for Passive Low Pass filter and Passive Band Pass Filter.

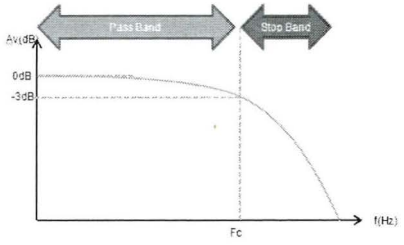

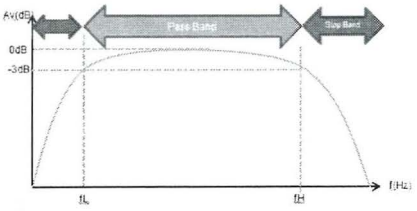

c) Given R=47kΩ and C=220pF. Draw the Passive Low Pass Filter circuit and calculate the cut off frequency for this filter.

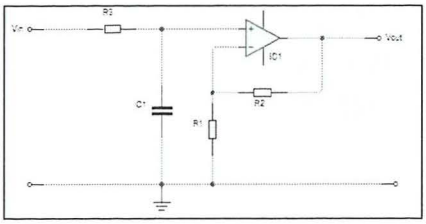

$$Fc = \frac{1}{2\pi R_3 C_1}$$

$$= \frac{1}{2\pi(47k)(220p)} = 15.39\text{kHz}$$

2. a)

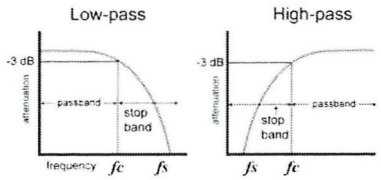

b) **THREE (3)** difference between Active Filter and Passive Filter

Passive Filter	Active Filter
Made up of a combination of passive elements.	Made up of a op-amp, resistors and capacitors.
No external power source required.	Require an external power source.
Not restricted by the bandwidth limitation of op-amps.	At high frequencies, it is limited by the bandwidth of the op-amp used.

c) Vout at frequency of 200Hz;

$$Xc = \frac{1}{2\pi fC} = \frac{1}{2\pi(200)(4.7n)}$$

$$= 169313.77\Omega$$

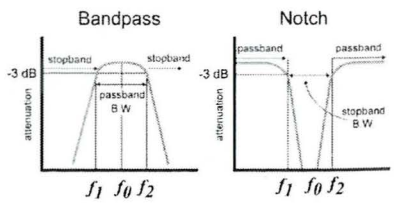

$$Vout = Vin\ x\ \frac{Xc}{\sqrt{R^2 + Xc^2}} = 10\ x\ \frac{169313.77}{\sqrt{4700^2 + 16931^2}} = 9.996V$$

Vout at frequency of 200kHz;

$$Xc = \frac{1}{2\pi fC} = \frac{1}{2\pi(200k)(4.7n)} = 169\Omega$$

$$Vout = Vin\ x\ \frac{Xc}{\sqrt{R^2 + Xc^2}} = 10\ x\ \frac{169}{\sqrt{4700^2 + 169^2}} = 0.72V$$

CHAPTER 6

Multiple Choice Questions

1. D
2. B
3. C
4. A
5. C

Essay Questions

1. a. State the function of an analogue to digital converter (ADC) and list TWO (2) types of its circuits.

   An ADC inputs an analog electrical signal such as voltage or current and output binary numbers.

   Example circuits: digital ramp converter(DRC) and successive approximation (SAC)

   b. Calculate the numbers of steps of an 8 bit analogue to digital converter (ADC) that has the input range from 0-12V. What is the voltage of each steps of the output?

•

No of steps $= 2^n - 1$

$= 2^8 - 1$

$= 255$

$$Step\ size = \frac{Vmax}{no\ of\ steps}$$

$$Step\ size = \frac{12}{255}$$

Step size =47.06mV

c. For a 3 bit R-2R ladder DAC in Figure 6.11, when input is 110 with +V=+5V, calculate the value of Va, Vb, Vc and Vout?

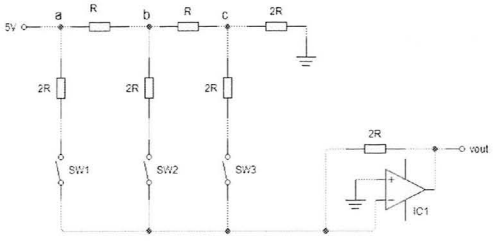

Figure 6.11

Va = *+5V*

Vb =*+2.5V*

Vc =*+1.25V*

$$Vout = -\frac{Vref}{2^3} x Binx \frac{2R}{R}$$

$$Vout = -\frac{5}{8} x 6x \frac{2R}{R}$$

$$Vout = 7.5V$$

2. a. List THREE (3) main parts of Digital Ramp Converter.

-counter

-comparator

-AND gate

-Digital to Analog converter

b. Sketch block diagram of a 4-bits DAC with resistor network and summing amplifier. Identify TWO (2) types DAC circuit.

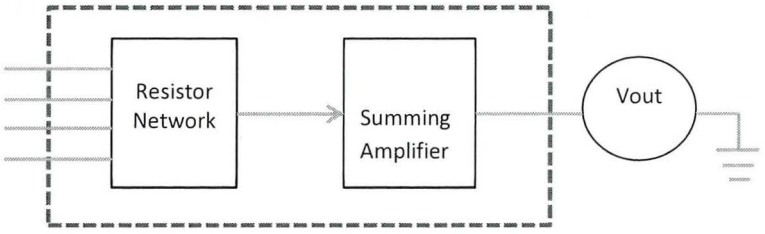

Two types of DAC Resistor Weight Binary and R/2R Ladder

c. Draw completely the configuration of DAC if R1=18.75KΩ, R2=37.5KΩ, R3=75KΩ and R4=150KΩ, Reference voltage 5V and Reference resistor 20KΩ calculate the output voltage for an input of 0111.

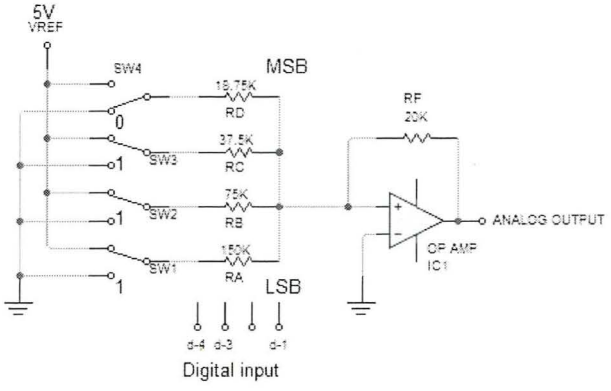

Input 0111

$RT_2 = \frac{1}{RA + RB} + \frac{1}{RC} + \frac{1}{150K\Omega} = \frac{1}{75K\Omega} + \frac{1}{37.5K\Omega} = 21.43K\Omega$

$Voltage\ Gain\ (A_V) = \frac{RF}{RT_2} = \frac{20K\Omega}{21.43K\Omega} = 0.93V$

$Vout = V_{ref} \times A_V = 5v \times 0.93V = 4.67V$

REFFERENCE

Malvino, A., & Bates, D. (2016). *Electronic principles*. New York: McGraw Hill Education.

Floyd, T. L. (2008). *Electronic devices: Conventional current version*. Upper Saddle River, NJ: Pearson Prentice Hall.

Paynter, R. T. (2006). *Introductory electronic devices and circuits:Electron flow version*. Upper Saddle River, N.J: Pearson Prentice Hall.

Paynter, R. T. (2006). *Introductory electronic devices and circuits:Conventional flow version*. Upper Saddle River, NJ: Pearson Prentice Hall.

Schuler, C. A. (2003). *Electronics: Principles and applications*. New York: Glencoe McGraw-Hill

Thomas E. Hoyd (2008). Robert T. Paynter (2006). *Introductory Electronic Devices and Circuits* (Seventh Edition), Upper Saddle River, NJ : Prentice Hall.

00029318



ISBN 978-967-2246-21-3