MIND MAP CONCEPT
STEP BY STEP APPROACH

AR-Enhanced Interactive eBOOK Edition

POWER SYSTEM

Noraini binti Harun| Nur Fadhlina binti Ahmad Fuad| Khairil Fazly bin Bachok

HOW DOES ELECTRICITY REACH YOU?



BEGIN THE POWER JOURNEY

AR-Enhanced Interactive eBOOK Edition

POWER SYSTEM

Mind Map Concept
Step-by-Step Approach

Noraini binti Harun
Nur Fadhlina binti Ahmad Fuad
Khairil Fazly bin Bachok

Published by
Politeknik Tun Syed Nasir Syed Ismail
Hab Pendidikan Tinggi Pagoh, KM1, Jalan Panchor,
84600 Pagoh Muar, Johor
2026



PUBLISHED BY

Politeknik Tun Syed Nasir Syed Ismail
Hab Pendidikan Tinggi Pagoh
KM1, Jalan Panchor
84600 Pagoh Muar
Johor

COPYRIGHT

Copyright © 2026 by Politeknik Tun Syed Nasir Syed Ismail

All rights reserved. No part of this publication may be reproduced or transmitted in any form or by any means, electronic or mechanical, including photocopy, recording, or any information storage and retrieval system, without prior permission from Politeknik Tun Syed Nasir Syed Ismail.

LIMIT OF LIABILITY/ DISCLAIMER OF WARRANTY

The publisher and the authors make no representations or warranties either express or implied, with respect to this document, its quality, performance, merchantability, or fitness for a particular purpose. The publisher shall not be liable for errors herein or for incidental consequential damages in connection with furnishing, performance, or use of these materials. The advice and strategies contained herein may not be suitable for every situation. Neither the publisher nor the authors shall be liable for damages arising here from. The fact that organizations or Websites are referred to in this work as a citation and/or a potential source of further information does not mean that the authors or the publisher endorses the information the organization or Websites may provide or recommendations it may make. Further, readers should be aware that Internet Websites listed in this in this work may have changed or disappeared between when this work was written and when it is read.

All information is correct at the time of print and is subject to change without prior notice.

Cataloguing-in-Publication Data

National Library of Malaysia

A catalogue record for this book is available from the National Library of Malaysia

eISBN 978-967-2736-54-7

Author & Editor: Noraini binti Harun
Co-author 1 : Nur Fadhlina binti Ahmad Fuad
Co-author 2: Khairul Fazly bin Bachok

PREFACE

The AR-Enhanced Interactive eBook Edition: Power System is developed as a digital edition translated from the original book, A Quick Guide Power System (ISBN: 9789671388594). This edition retains the original book's distinctive learning approach while incorporating interactive digital elements to provide a more engaging learning experience for students.

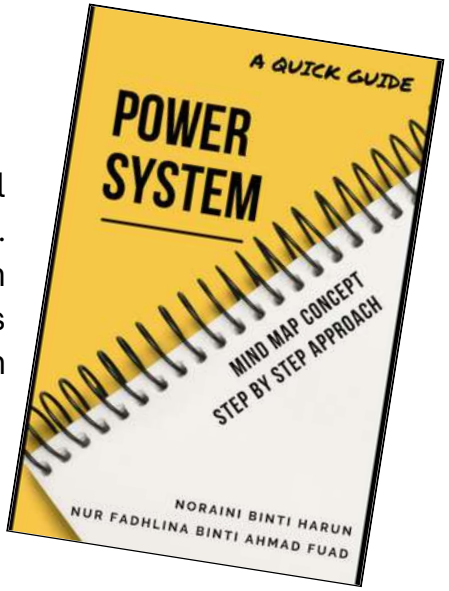

Understanding power system concepts can be challenging because many topics involve technical terminology, electrical diagrams, mathematical relationships and systematic problem-solving. Therefore, this eBook adopts the Mind Map Concept to provide learners with a clear overview of each topic and the relationship between key concepts from the beginning to the end of a chapter. This approach is complemented by Step-by-Step examples that guide learners progressively in understanding and applying the relevant concepts and solving power system problems.



To enhance learning and visual understanding, the eBook is presented through colourful illustrations, diagrams and visual learning elements. These features are designed to make technical information more accessible and easier to understand, remember and recall.

As an enhanced digital edition, the eBook also incorporates interactive Augmented Reality (AR) features. These features provide learners with opportunities to explore selected learning content in a more interactive and immersive manner, extending learning beyond conventional static text and diagrams.



It is hoped that this eBook will serve as a useful learning companion for students in Electrical Engineering and Power System courses, while also supporting educators in delivering technical concepts in a clearer, more engaging and learner-centred way.

Author & Editor: Noraini binti Harun
Co-author 1 : Nur Fadhlina binti Ahmad Fuad
Co-author 2: Khairul Fazly bin Bachok

GUIDE TO INTERACTIVE LEARNING SYMBOLS

See a symbol? Follow the instruction below.



Site Visit + AR Exploration
Explore real-world applications through site visits and AR activities.



More Info
Click to read additional information.



Home
Return to the main navigation page.



AR Page
Scan the marker to explore AR learning content.



Recap Quiz
Complete the quiz to check your understanding.



Example
Study how the concept is applied.



Interactive Page
Click to explore interactive content and activities.



Click Here
Click to open the linked learning resource.



Think
Pause, reflect and answer the question.



Try It Yourself First
Try the problem first, then check the solution.



Back to Step 4
Return to Step 4 of the solution.



Step-by-Step Solution
Follow each step to understand the solution.



Watch Video
Click to watch a video about the topic.

CLICK • SCAN • THINK • EXPLORE

TABLE OF CONTENTS

1



INTRODUCTION TO POWER SYSTEM

This topic covers the generation of electrical power and the concept and the usage of renewable energy.

Page: 1 to 22

2

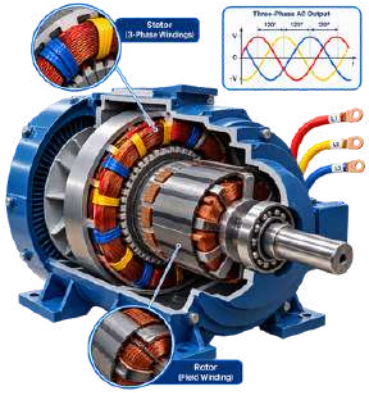

THREE PHASE SYSTEM

This topic covers the three phase system and three phase system configuration.

Page: 23 to 51

3



TRANSFORMER

This topic covers the mutual inductance, the construction and the operation of a transformer, how transformer increases and decreases voltage, the effect of a resistive load across the secondary winding, the configuration of three phase transformer and several types of transformers.

Page: 52 to 100

4



DISTRIBUTION SYSTEM

This topic covers the basic distribution system and the role of distribution substations.

Page: 101 to 118

5



FAULT CALCULATION

This topic covers the basic distribution system and the role of distribution substations.

Page: 119 to 185

REFERENCES
Page: 186 to 187

1 INTRODUCTION TO POWER SYSTEM



MIND MAP

OVERVIEW TOPIC 1

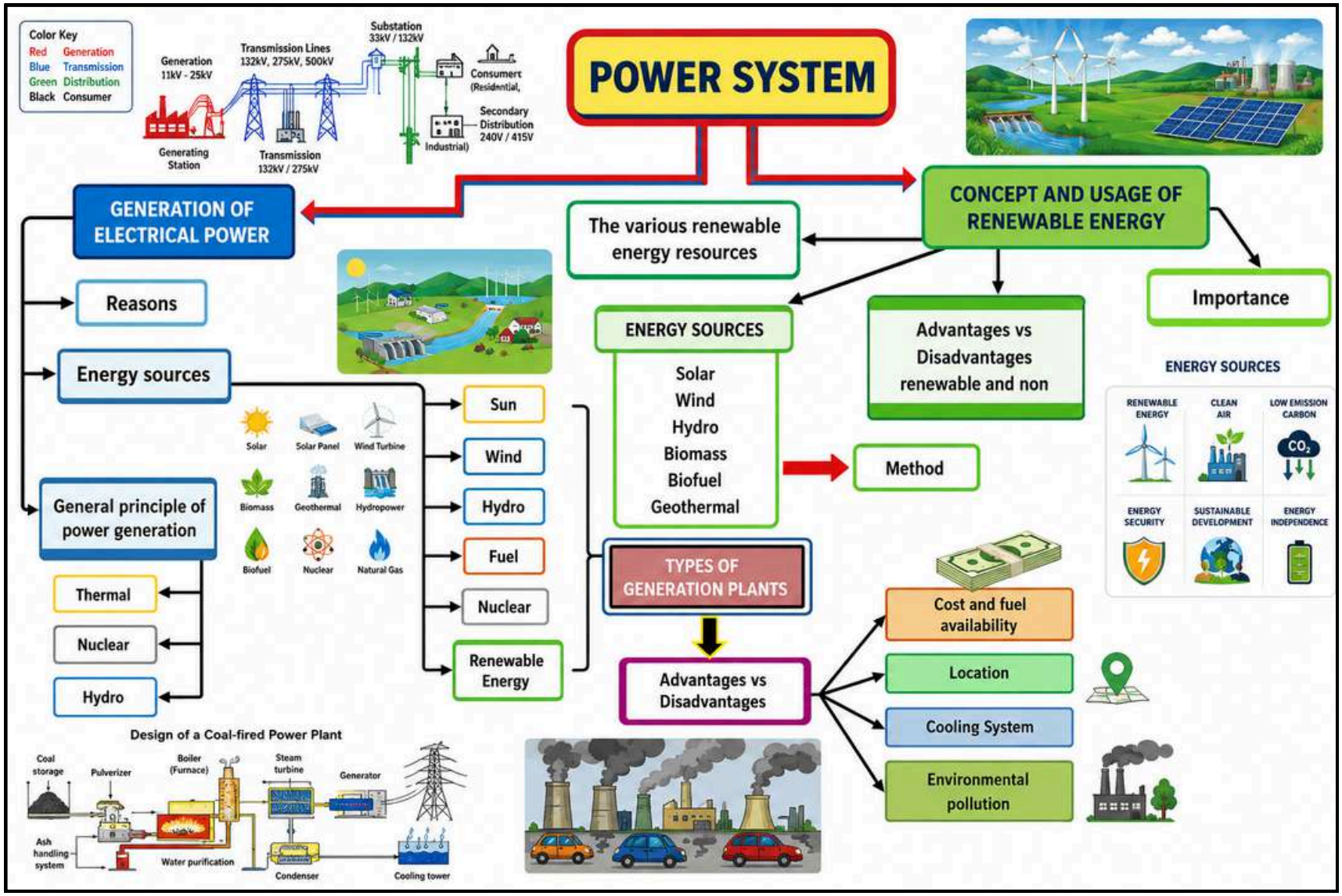

INTRODUCTION

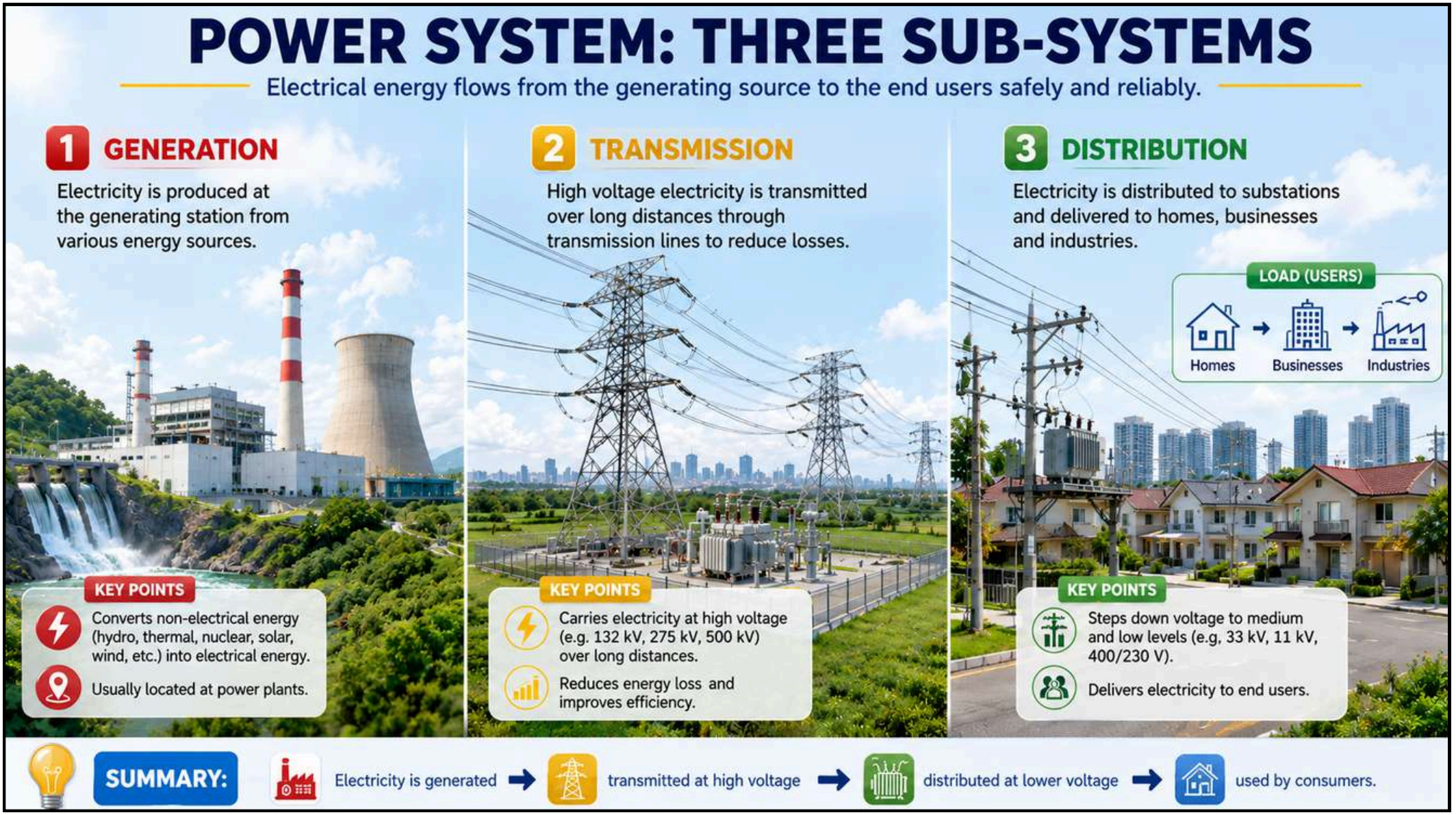

THE REASONS INFLUENCING THE GENERATION OF ELECTRICAL POWER



ENERGY SOURCES FOR POWER GENERATION

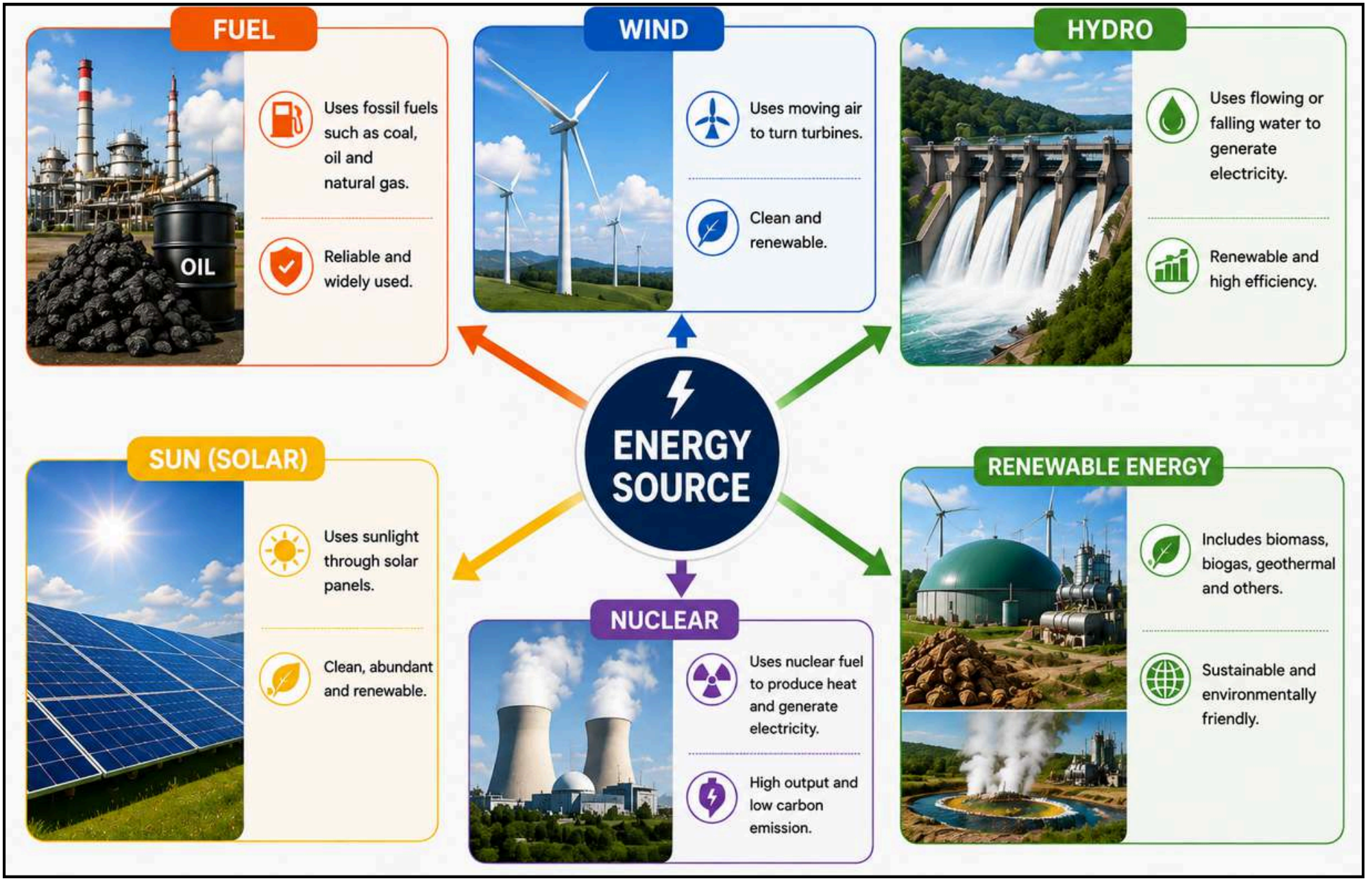

01 SOLAR ENERGY

The power of the sun that lights our world.

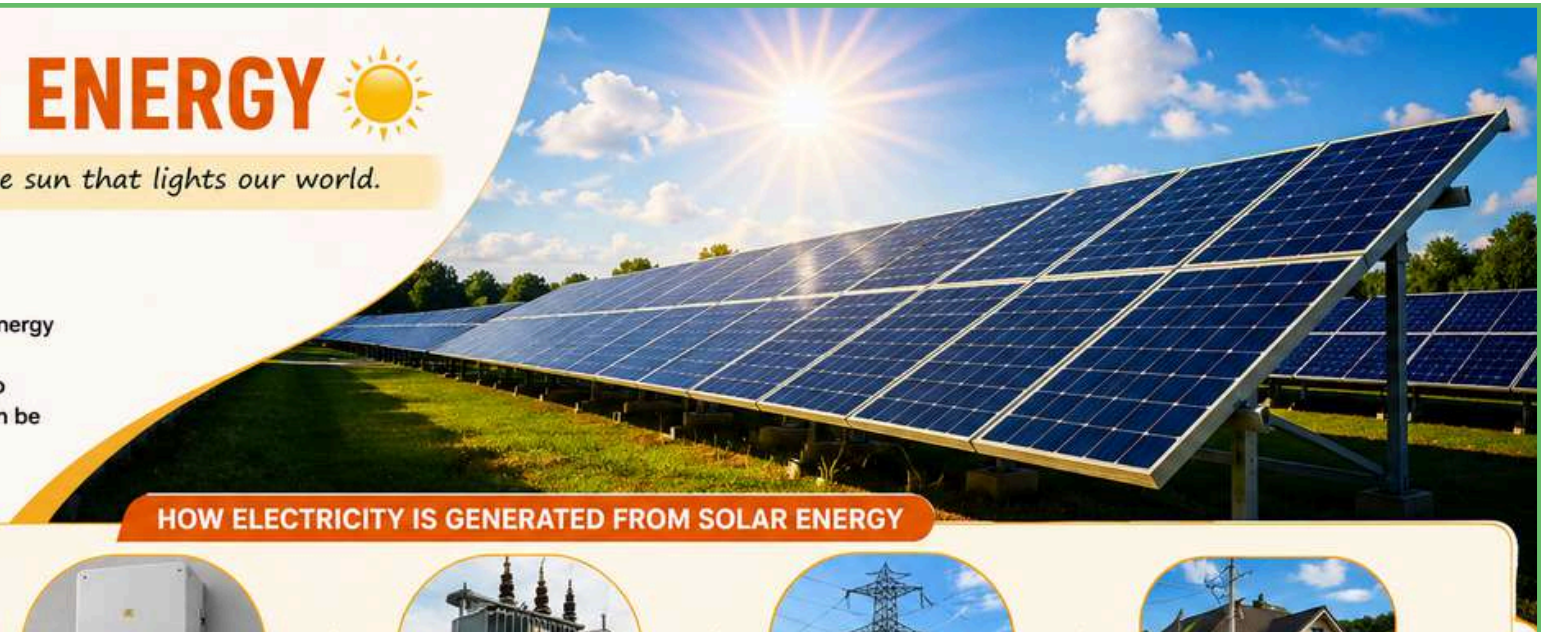

OVERVIEW

- Sun energy is the primary source of energy on Earth.
- The heat from the sun can be used to raise steam, and electrical energy can be produced with the help of a turbine–generator combination.

HOW ELECTRICITY IS GENERATED FROM SOLAR ENERGY



1. Solar Radiation
Sunlight (photons) hits the solar panels.



2. DC Electricity
Solar panels convert sunlight into direct current (DC) electricity.



3. Conversion
Inverter converts DC electricity into alternating current (AC) electricity.



4. Transmission
Electricity is stepped up by a transformer and transmitted through power lines.



5. Distribution to Consumers
Electricity is distributed to homes, businesses and industries for use.

KEY ADVANTAGES

- Renewable and abundant
- Clean and environmentally friendly
- Low operating and maintenance cost
- Can be installed in many locations
- Helps reduce electricity bills



LIMITATIONS

- Requires a large area for the generation of even a small amount of electrical power.
- It cannot be used in cloudy days or at night.
- Energy output depends on sunlight intensity.
- Initial installation cost is relatively high.
- It is an uneconomical method for large scale power generation.



DID YOU KNOW?
One hour of sunlight can provide enough energy to power the world for an entire year!

Solar energy is a clean, renewable and sustainable energy source for a brighter future.



BASIC CONCEPT OF A GCPV SYSTEM

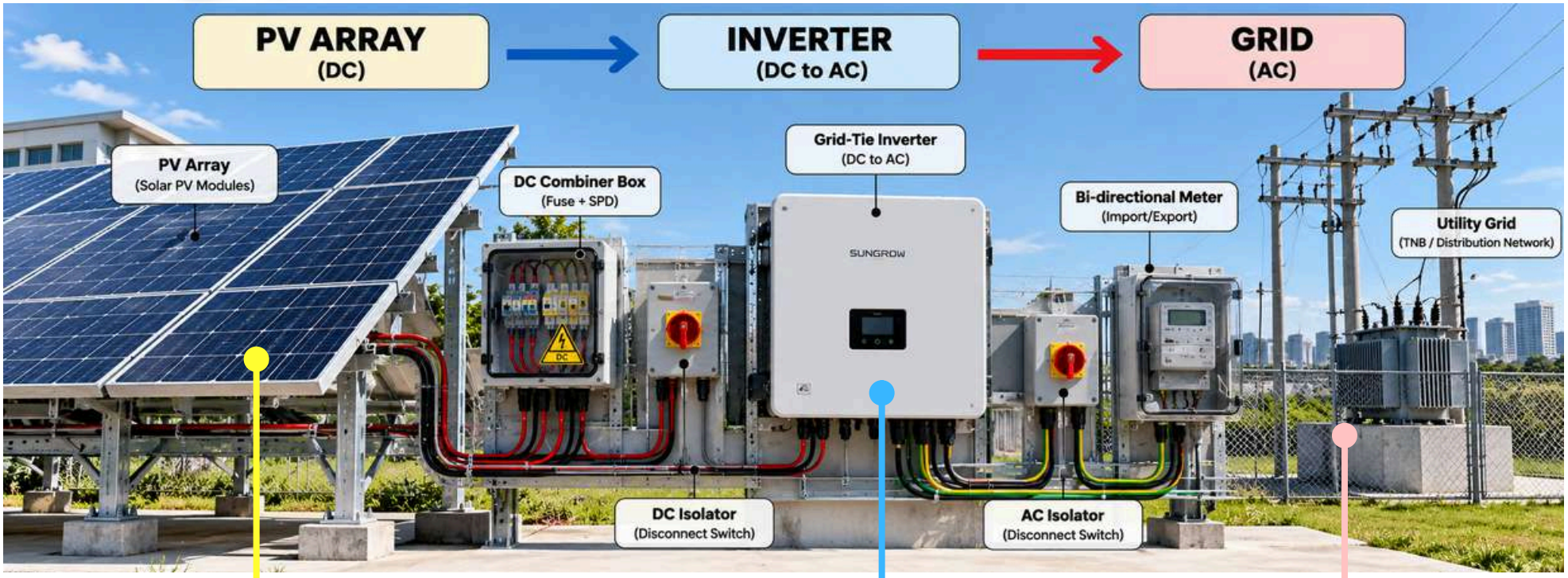



BASIC CONCEPT OF AN OGPV SYSTEM

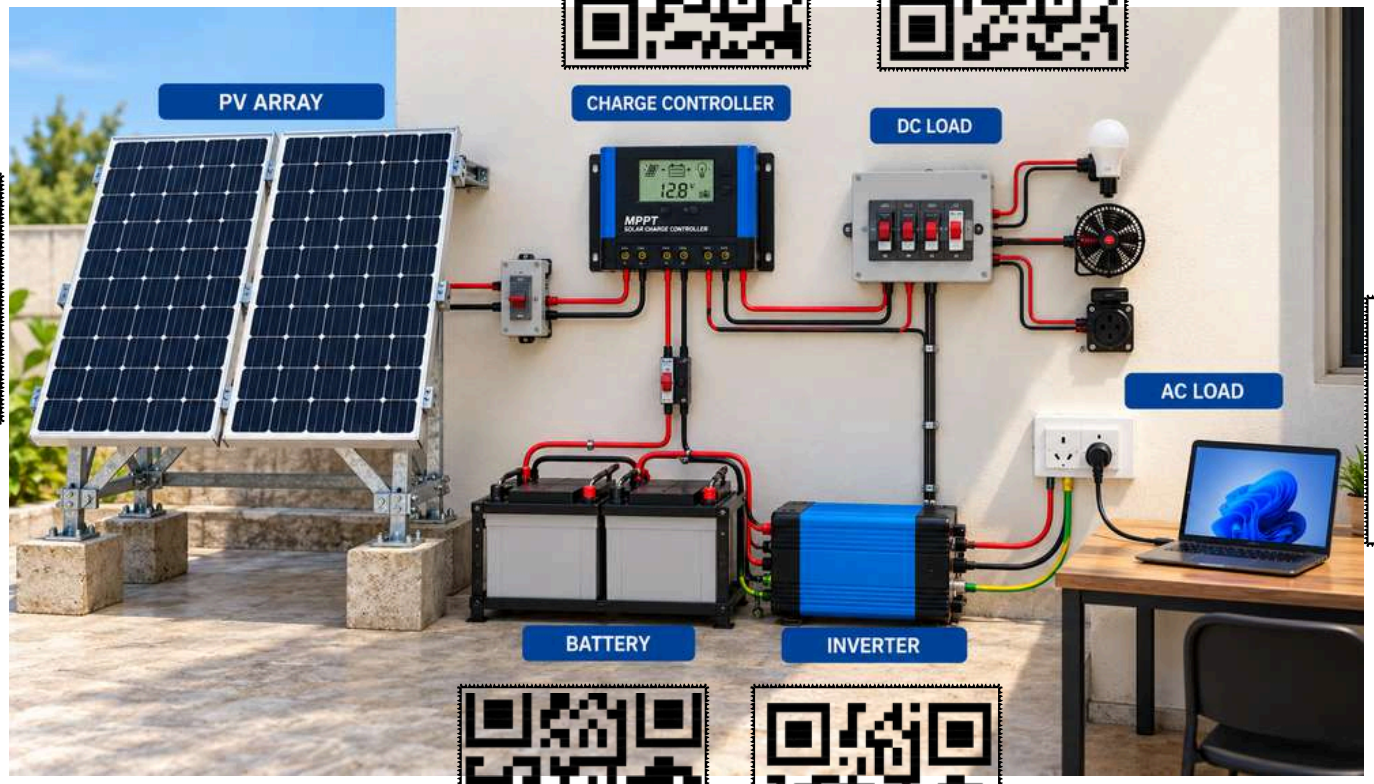

02 WIND ENERGY

Turning wind into power for a cleaner tomorrow.



OVERVIEW

- Wind energy is generated from the kinetic energy of moving air.
- Wind turbines convert the kinetic energy of wind into mechanical energy.
- The mechanical energy drives a generator to produce electrical energy.

HOW ELECTRICITY IS GENERATED FROM WIND ENERGY



1. Wind
Wind blows and turns the blades of the turbine.



2. Rotor
The rotor (blades and hub) converts wind energy into rotational mechanical energy.



3. Gearbox
The rotor spins a shaft connected to a gearbox, which increases the rotational speed.



4. Generator
The high-speed shaft drives a generator to produce electrical energy.



5. Transformer
The voltage is stepped up by a transformer for efficient transmission.



6. Transmission
Electricity is transmitted through power lines to the grid and used by consumers.

KEY ADVANTAGES

- Renewable and inexhaustible source.
- No fuel cost – free energy from wind.
- Low operating and maintenance cost.
- Clean and environmentally friendly.
- Can be installed on land or offshore.



LIMITATIONS

- Wind is not constant and varies with location and time.
- Requires suitable windy locations.
- Can cause noise and visual impact.
- High initial installation cost.
- Needs backup or energy storage for reliability.



DID YOU KNOW?

A single large wind turbine can generate enough electricity to power hundreds to thousands of homes!

Wind energy plays an important role in reducing greenhouse gas emissions and combating climate change.

Wind energy is clean, renewable and sustainable – harnessing the power of nature to build a better future.

03 HYDRO ENERGY

The power of moving water for a sustainable future.

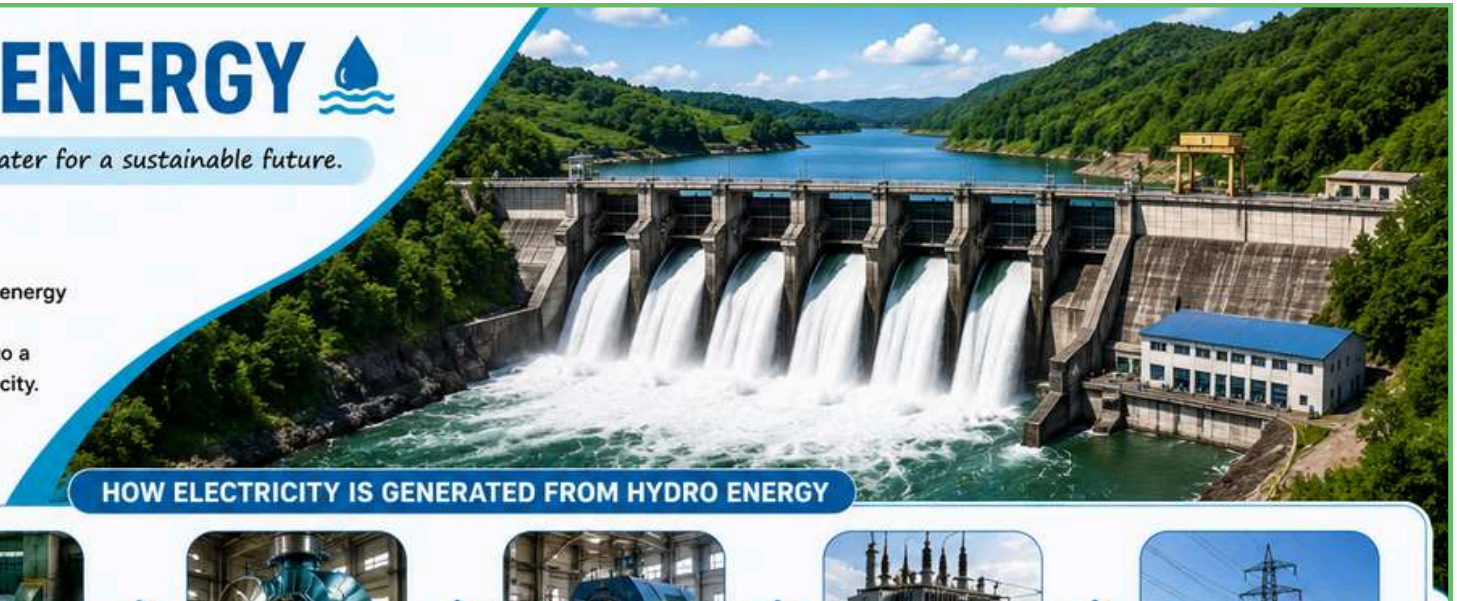

OVERVIEW

- Hydro energy is generated from the potential energy of stored water.
- When water flows or falls from a higher level to a lower level, its energy is converted into electricity.
- It is a clean, renewable and highly reliable source of energy.

HOW ELECTRICITY IS GENERATED FROM HYDRO ENERGY



1. Water Storage
Water is stored in a dam or reservoir at a high elevation.



2. Water Flow
When released, water flows down through penstocks due to gravity.



3. Turbine
The moving water spins the turbine, converting the water's energy into mechanical energy.



4. Generator
The turbine drives the generator, which converts mechanical energy into electrical energy.



5. Transformer
The voltage is stepped up by a transformer for efficient transmission.



6. Transmission
Electricity is transmitted through power lines to the grid and used by consumers.

KEY ADVANTAGES

- Renewable and sustainable source.
- High efficiency and reliable.
- Low operating cost.
- Long lifespan of equipment.
- Can provide energy storage and help stabilize the power grid.



LIMITATIONS

- High initial cost of construction.
- Depends on rainfall and water availability.
- Can cause environmental impact on rivers and ecosystems.
- Limited suitable locations.
- Large area of land may be required for reservoirs.



DID YOU KNOW?

Hydropower is the world's largest source of renewable electricity, providing about **16%** of the world's electricity.

Water flows from high to low, and its energy is converted into clean electricity.

KEY TAKEAWAY

Hydro energy uses the power of water to generate reliable, efficient and clean electricity for our daily lives.

04 FUEL (THERMAL) ENERGY

Converting the energy of fuels into electricity.



OVERVIEW

- Fuel (such as coal, oil, or natural gas) is burned in a boiler to produce heat.
- The heat converts water into high-pressure steam.
- The steam spins a turbine, which drives a generator to produce electricity.
- This is a reliable and widely used source of electricity around the world.

COMMON FUELS

COAL
Abundant and cost-effective.

OIL
High energy density.

NATURAL GAS
Cleaner burning compared to coal and oil.

HOW ELECTRICITY IS GENERATED FROM FUEL ENERGY



1. FUEL SUPPLY
Fuel is delivered and stored before being fed into the boiler.



2. COMBUSTION (BOILER)
Fuel is burned in the boiler to produce heat. The heat boils water into high-pressure steam.



3. STEAM GENERATION
High-pressure steam is produced and directed towards the turbine.



4. TURBINE
The steam spins the turbine blades, converting the steam energy into mechanical energy.



5. GENERATOR
The turbine drives the generator, which converts mechanical energy into electrical energy.



6. TRANSMISSION
Electricity is stepped up by a transformer and transmitted through power lines to the grid and used by consumers.

KEY ADVANTAGES

- Reliable and can generate electricity 24/7.
- High power output and can meet large demand.
- Technology is mature and widely available.
- Fuel sources are abundant and easy to store.
- Can be built near demand centres.



LIMITATIONS

- Non-renewable and will eventually run out.
- Causes air pollution and greenhouse gas emissions (CO_2, SO_2, NO_x, particulate matter).
- Contributes to climate change.
- Requires large amount of water for cooling.
- Fuel cost is subject to market price fluctuations.



DID YOU KNOW?
More than **60%** of the world's electricity is still generated from fossil fuels.

CO_2

Burning fossil fuels releases carbon dioxide, a major contributor to global warming.

Modern power plants use advanced technologies like flue gas treatment and high-efficiency boilers to reduce environmental impact.

KEY TAKEAWAY
Fuel (thermal) energy is a dependable and powerful source of electricity, but it comes with environmental responsibilities.

05 NUCLEAR ENERGY

Power from the atom for a sustainable future.



OVERVIEW

- Nuclear energy is released from the nucleus of atoms through a process called fission.
- The heat produced is used to generate steam.
- The steam spins a turbine, which drives a generator to produce electricity.
- It is a reliable source of large-scale electricity with very low greenhouse gas emissions.

NUCLEAR FUEL



URANIUM FUEL PELLETS
(Enriched Uranium)
Small pellets made from uranium dioxide used as fuel in the reactor.



FUEL ASSEMBLY
Pellets are sealed in metal rods and assembled in bundles for use in the reactor core.

HOW ELECTRICITY IS GENERATED FROM NUCLEAR ENERGY



1 FUEL IN REACTOR
Uranium fuel pellets undergo fission in the reactor core, releasing a large amount of heat.



2 HEAT TO STEAM
The heat is transferred to water in a steam generator, producing high-pressure steam (no radioactive water goes to turbine).



3 TURBINE
The high-pressure steam spins the turbine blades, converting the steam energy into mechanical energy.



4 GENERATOR
The turbine drives the generator, which converts the mechanical energy into electrical energy.



5 TRANSFORMER
The voltage is stepped up by a transformer for efficient transmission over long distances.



6 TRANSMISSION
Electricity is transmitted through power lines to the grid and used by consumers.

KEY ADVANTAGES

- Very high energy output from a small amount of fuel.
- Reliable and can operate 24/7 (baseload power).
- Very low greenhouse gas emissions during operation.
- Requires less fuel and land compared to other sources.
- Long operating life and stable power supply.



LIMITATIONS

- High initial cost of construction.
- Radioactive waste requires safe handling and long-term storage.
- Risk of nuclear accidents (though very low with safety systems).
- Time-consuming for construction and licensing.
- Requires highly skilled workforce and strict safety measures.



DID YOU KNOW?

A small amount of uranium fuel (about the size of a fingertip) can produce as much energy as about **1 ton of coal!**

Nuclear power plants produce nearly zero CO_2 emissions during operation.

Modern nuclear plants have multiple safety systems to protect people and the environment.

KEY TAKEAWAY

Nuclear energy provides large amounts of reliable and clean electricity. With responsible management and strict safety standards, it plays an important role in meeting our energy needs and reducing carbon emissions.

06 BIOMASS ENERGY

ENERGY FROM ORGANIC MATERIALS, SUSTAINABLE FOR OUR FUTURE

RENEWABLE • SUSTAINABLE • RESPONSIBLE

DEFINITION

Biomass energy is energy obtained from organic materials such as wood, crop residues, agricultural waste, animal waste and municipal solid waste. These materials store energy from the sun through photosynthesis. When biomass is burned or converted into fuels, that stored energy is released and used to generate heat or electricity.

SOURCES OF BIOMASS


Wood & wood residues


Agricultural residues


Municipal solid waste


Biomass pellets


Animal waste

BIOMASS POWER PLANT

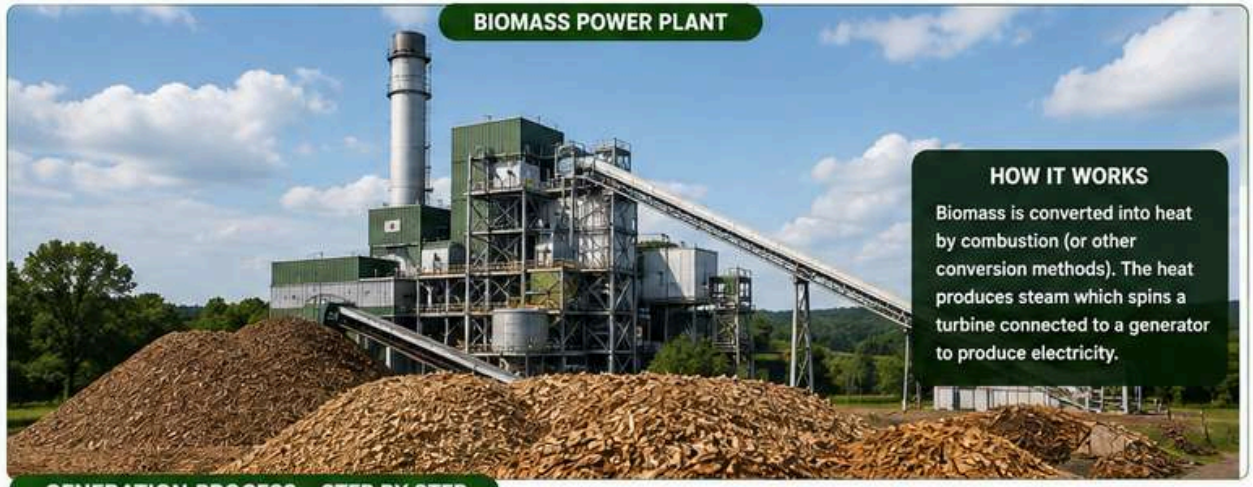

HOW IT WORKS

Biomass is converted into heat by combustion (or other conversion methods). The heat produces steam which spins a turbine connected to a generator to produce electricity.

GENERATION PROCESS – STEP BY STEP

1 FUEL COLLECTION

Biomass materials are collected from various sources.



2 FUEL PREPARATION

The biomass is sorted, shredded or pelletized to ensure uniform size and quality.



3 COMBUSTION

The prepared biomass is burned in a boiler to produce high-temperature heat.



4 STEAM PRODUCTION

Heat from the boiler converts water into high-pressure steam.



5 TURBINE & GENERATOR

The steam spins the turbine which drives the generator to produce electricity.



6 ELECTRICITY OUTPUT

Electricity is sent to the transformer and transmitted to the power grid.



ADVANTAGES

- **Renewable and sustainable** – biomass can be replenished naturally.
- **Reduces waste** – utilizes agricultural, forestry and municipal waste.
- **Lower net greenhouse gas emissions** – carbon released is offset by carbon absorbed during growth.
- **Supports local economy** – creates jobs in rural and agricultural communities.
- **Reliable energy source** – can generate power continuously, not weather-dependent.

LIMITATIONS

- **Emissions** – produces CO_2, NO_x, SO_x and particulate matter if not properly controlled.
- **Requires large land area** – for biomass cultivation or collection.
- **Lower energy density** – more fuel is needed compared to fossil fuels.
- **Transportation cost** – bulky biomass can be expensive to transport.
- **Competes with other uses** – biomass can be used for food, animal feed or other industries.

KEY TAKEAWAY



Biomass energy converts organic materials into useful energy through combustion or other conversion methods. It is a renewable and sustainable energy source that helps reduce waste and greenhouse gas emissions when managed responsibly.



REMEMBER: BIOMASS ENERGY – TURNING WASTE INTO POWER, BUILDING A CLEANER AND SUSTAINABLE TOMORROW.

07 BIOFUEL ENERGY

RENEWABLE FUEL FOR A CLEANER FUTURE

RENEWABLE | CLEANER FUEL | SUSTAINABLE

DEFINITION

Biofuel energy is energy derived from biomass sources such as plant oils, animal fats, sugar, starch or organic waste. These materials are converted into liquid or gaseous fuels that can be used for transportation, heating and electricity generation.
Biofuels are a renewable alternative to conventional fossil fuels.

SOURCES OF BIOFUEL


Oil palm (Vegetable oil)


Sugarcane (Sugar)


Corn (Starch)


Jatropha & other oil seeds


Organic waste & animal fats

BIOFUEL PRODUCTION FACILITY



HOW IT WORKS

Biomass is processed and converted into liquid or gaseous fuels through various methods such as transesterification, fermentation or anaerobic digestion. The biofuel produced is then used in engines, boilers or generators to produce energy.

GENERATION PROCESS – STEP BY STEP

1 FEEDSTOCK COLLECTION
Biomass raw materials are collected from various sources.



2 PRETREATMENT
Raw materials are cleaned, crushed or milled to prepare for conversion.



3 CONVERSION PROCESS
Biomass is converted into biofuel using physical, chemical or biological methods.



4 BIOFUEL PRODUCTION
The conversion produces liquid biofuels (biodiesel, bioethanol) or biogas.



5 ENERGY CONVERSION
Biofuel is used in engines, boilers or gas turbines to produce mechanical energy.



6 ELECTRICITY / HEAT OUTPUT
Mechanical energy is converted to electricity or useful heat for various applications.



ADVANTAGES

- **Renewable and sustainable** – biofuels are derived from naturally replenished biomass.
- **Lower net greenhouse gas emissions** – reduces CO_2 emissions compared to fossil fuels.
- **Supports energy security** – can be produced locally using domestic resources.
- **Waste utilization** – converts organic waste and by-products into useful energy.
- **Compatible with existing infrastructure** – can be used in current engines and fuel systems (with minimal modification).

LIMITATIONS

- **Competes with food production** – crop-based biofuels may affect food supply and prices.
- **Land and water requirement** – large-scale cultivation requires land, water and fertilizers.
- **Lower energy density** – biofuels have lower energy content than fossil fuels.
- **Production cost** – biofuels can be more expensive to produce.
- **Emissions still exist** – some pollutants are produced during combustion.

KEY TAKEAWAY

Biofuel energy turns biomass into liquid or gaseous fuels that can replace or supplement fossil fuels. It is a renewable, cleaner and more sustainable energy option that supports a greener transportation and energy future.



REMEMBER: BIOFUEL ENERGY – FROM BIOMASS TO FUEL, POWERING TODAY AND PROTECTING TOMORROW.

08 GEOTHERMAL ENERGY

ENERGY FROM THE EARTH'S HEAT, POWERING SUSTAINABLE FUTURES

RENEWABLE • CLEAN • RELIABLE

DEFINITION

Geothermal energy is energy obtained from the natural heat stored beneath the Earth's surface. This heat comes from the formation of the Earth and the decay of radioactive materials in rocks.

Hot water or steam from underground reservoirs is brought to the surface and used to generate electricity or provide direct heating.

SOURCES OF GEOTHERMAL ENERGY



Hot springs



Geysers



Steam vents



Hot water reservoirs

GEOTHERMAL POWER PLANT



HOW IT WORKS

Geothermal reservoirs contain hot water or steam trapped in underground rocks. Wells are drilled to reach these reservoirs. The hot water or steam is brought to the surface and used to spin a turbine connected to a generator to produce electricity.

GENERATION PROCESS – STEP BY STEP

1 EXPLORATION & DRILLING

Wells are drilled deep into the earth to reach geothermal reservoirs.



2 RESOURCE EXTRACTION

Hot water or steam rises naturally or is pumped up through the production well.



3 STEAM SEPARATION (If necessary)

For hot water resources, steam is separated from water in a separator tank.



4 TURBINE OPERATION

The steam spins the turbine blades, converting heat energy into mechanical energy.



5 GENERATOR

The turbine is connected to a generator which converts mechanical energy into electrical energy.



6 ELECTRICITY OUTPUT

Electricity is sent to the transformer and transmitted to the power grid.



ADVANTAGES

- **Renewable and sustainable** – heat is naturally replenished in the Earth.
- **Reliable and consistent** – can generate power 24/7, not dependent on weather.
- **Low greenhouse gas emissions** – much lower than fossil fuels.
- **Small land footprint** – requires less land compared to solar or wind farms.
- **Long lifespan** – geothermal plants can operate for decades with proper management.

LIMITATIONS

- **High initial cost** – exploration and drilling are expensive.
- **Site specific** – suitable locations are limited to areas with geothermal activity.
- **Risk of induced seismicity** – drilling and fluid injection may trigger small earthquakes.
- **Mineral deposits and corrosion** – can cause scaling and equipment wear.
- **Possible release of gases** – such as H_2S and CO_2 (usually in small amounts).

KEY TAKEAWAY

Geothermal energy taps the Earth's natural heat to produce electricity or provide heating. It is a reliable, clean and sustainable energy source with low emissions, but it is site-specific and requires high upfront investment.

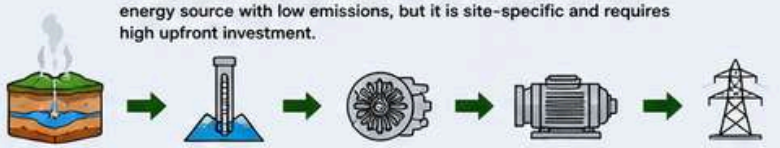

REMEMBER: GEOTHERMAL ENERGY – HEAT FROM WITHIN, POWER FOR TODAY AND TOMORROW.

ENERGY SOURCES: ADVANTAGES vs LIMITATIONS

A COMPARISON TO CHOOSE A SMARTER AND SUSTAINABLE FUTURE

ENERGY SOURCE (Natural Source)	ADVANTAGES — Why it is good for us	LIMITATIONS — What we need to consider
1  SOLAR ENERGY	• Clean, renewable and abundant. • No fuel cost – free energy from the sun. • Low operating and maintenance cost. • Can be installed on rooftops and unused land.	• Depends on sunlight and weather. • Cannot generate electricity at night. • Requires large area for large-scale generation. • High initial installation cost.
2  WIND ENERGY	• Renewable and inexhaustible. • No fuel cost and low operating cost. • Clean with very low greenhouse gas emissions. • Land under turbines can still be used.	• Wind speed is unpredictable and varies. • Not suitable for all locations. • Can cause noise and visual impact. • High initial installation cost.
3  HYDRO ENERGY	• Reliable and can generate power continuously. • High efficiency and low operating cost. • Long lifespan of infrastructure. • Can provide energy storage (pumped storage).	• Very high initial cost of construction. • Depends on rainfall and water availability. • Can cause environmental impact on rivers and ecosystems. • Large area of land may be required.
4  FUEL (THERMAL) ENERGY	• Reliable and can generate power 24/7. • High power output and can meet large demand. • Technology is mature and widely available. • Can be built near demand centres.	• Uses non-renewable fossil fuels. • Causes air pollution and greenhouse gas emissions. • Contributes to climate change. • Fuel cost is subject to market price fluctuations.
5  NUCLEAR ENERGY	• Very high energy output from small fuel amount. • Reliable and can operate 24/7 (baseload power). • Very low greenhouse gas emissions during operation. • Small land requirement.	• High initial cost of construction. • Radioactive waste requires safe handling and long-term storage. • Risk of nuclear accidents (though very low with safety systems). • Time-consuming for construction and licensing.
6  BIOMASS ENERGY	• Uses organic waste and residues. • Renewable and can reduce waste. • Lower greenhouse gas emissions compared to fossil fuels. • Can support local economy and jobs.	• Requires continuous supply of biomass. • Can cause air pollution if not well controlled. • Lower energy density than fossil fuels. • Transportation and storage can be costly.
7  BIOFUEL ENERGY	• Renewable alternative to fossil fuels. • Can be used in existing engines and infrastructure. • Can reduce greenhouse gas emissions. • Supports energy security and rural development.	• Production may require large land areas. • May compete with food production. • Water and fertilizer are needed. • Energy output is lower than fossil fuels.
8  GEOTHERMAL ENERGY	• Reliable and available 24/7. • Very low greenhouse gas emissions. • Small land footprint. • Low operating cost and long lifespan.	• Suitable only in specific geological locations. • High initial exploration and drilling cost. • Risk of induced seismicity in some areas. • Possible release of minerals and gases.

KEY MESSAGE

Every energy source has its strengths and limitations. The best solution is to use the right mix for a reliable, affordable and sustainable energy future.

QUICK MEMORY GUIDE

SOLAR	WIND	HYDRO	FUEL	NUCLEAR	BIOMASS	BIOFUEL	GEOTHERMAL
CLEAN but VARIABLE	FREE but UNSTABLE	RELIABLE but EXPENSIVE	RELIABLE but POLLUTING	POWERFUL but COMPLEX	USES WASTE but NEEDS MATERIAL	RENEWABLE but LAND-DEPENDENT	CONSTANT but LOCATION-LIMITED

THE GENERAL PRINCIPAL OF POWER GENERATION

01 THERMAL POWER PLANT

THE GENERAL PRINCIPLE OF POWER GENERATION

Heat Energy to Electrical Energy

DEFINITION

A thermal power plant generates electricity by converting **heat energy into mechanical energy** and finally **electrical energy**.

Heat is produced by burning fuels such as coal, natural gas or oil. The heat converts water into high-pressure steam, which rotates a turbine connected to a generator.

COMMON FUELS


COAL


NATURAL GAS


OIL

REAL THERMAL POWER PLANT



GENERATION PROCESS – STEP BY STEP

1 FUEL
Fossil fuel is supplied to the boiler.



2 BOILER
Fuel is burned to produce heat and boil water.



3 HIGH-PRESSURE STEAM
High-pressure steam is generated and sent to the turbine.



4 STEAM TURBINE
The steam flows through the turbine, causing it to rotate.



5 GENERATOR
The turbine drives the generator to produce electricity.



6 ELECTRICITY
Electricity is stepped up by a transformer and transmitted to the power grid.



SIMPLE SCHEMATIC DIAGRAM

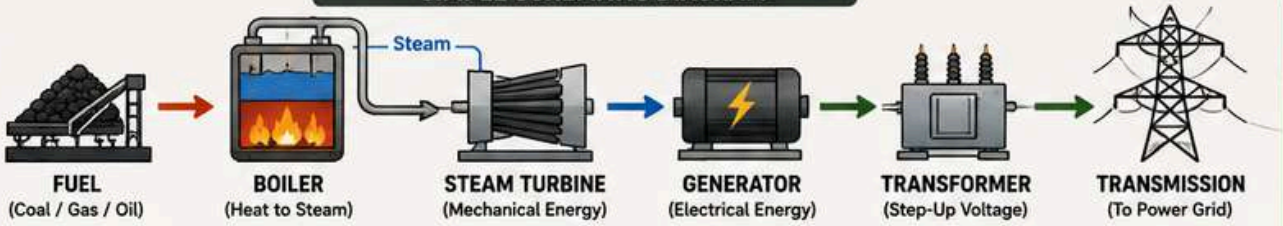

MEMORY HOOK

BURN → BOIL → SPIN → GENERATE

Burn fuel to produce heat, boil water into steam, spin the turbine, and generate electricity.

KEY TAKEAWAY

Thermal power plants use the heat from burning fossil fuels to produce steam. The steam spins a turbine, which drives a generator to produce electricity for homes, industries and businesses.

Watch Video **How Thermal Power Plants Work? | Complete Walkthrough**

02 NUCLEAR POWER PLANT

THE GENERAL PRINCIPLE OF POWER GENERATION

From Nuclear Energy to Electrical Energy

DEFINITION

A nuclear power plant generates electricity using the **heat released from nuclear fission.**

The heat is used to produce steam, which rotates a turbine connected to a generator.

Unlike a conventional thermal power plant, the heat source comes from a nuclear reactor instead of burning fossil fuel.

REAL NUCLEAR POWER PLANT



NUCLEAR FUEL



URANIUM FUEL PELLETS
Used as fuel in the reactor core.



FUEL ASSEMBLY
Pellets are sealed in metal tubes to form fuel rods.

GENERATION PROCESS – STEP BY STEP

1 NUCLEAR FUEL
Nuclear fuel is placed in the reactor core.



2 NUCLEAR REACTOR
Nuclear fission occurs in the reactor core, releasing a large amount of heat.



3 HEAT TO STEAM
Heat is transferred to water in the steam generator, producing high-pressure steam.



4 STEAM TURBINE
The high-pressure steam flows through the turbine, causing it to rotate.



5 GENERATOR
The turbine drives the generator to produce electrical energy.



6 ELECTRICITY
Electricity is stepped up by a transformer and transmitted to the power grid.



SIMPLE SCHEMATIC DIAGRAM



MEMORY HOOK

SPLIT → HEAT → STEAM → SPIN → GENERATE



KEY TAKEAWAY

Nuclear power plants use controlled nuclear fission to produce heat. The heat converts water into steam, which spins a turbine connected to a generator, producing large amounts of reliable electricity with low greenhouse gas emissions.

Watch Video **How does a nuclear power plant work?**

03 HYDRO POWER PLANT

THE GENERAL PRINCIPLE OF POWER GENERATION

From Water Energy to Electrical Energy

DEFINITION

A hydro power plant generates electricity by converting **the potential and kinetic energy of flowing water into electrical energy.**

Water stored at a higher level behind a dam is released through a penstock. The moving water spins a turbine connected to a generator to produce electricity.

WATER IS NATURE'S POWER



STORED WATER
Water is stored at a high level.



FLOWING WATER
Water flows down with force.



TURBINE ACTION
The turbine spins to produce power.

REAL HYDRO POWER PLANT

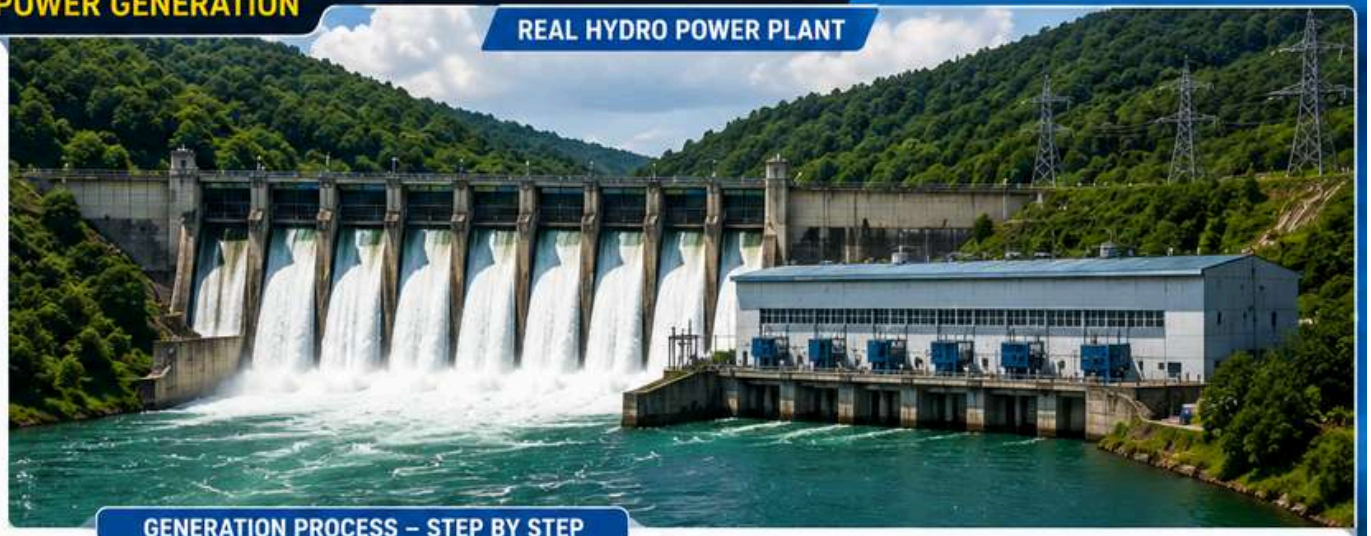

GENERATION PROCESS – STEP BY STEP

1 WATER RESERVOIR
Water is stored at a high level in the reservoir.



2 DAM
The dam holds the water and controls its release.



3 WATER FLOW
Water is released and flows through the penstock.



4 HYDRAULIC TURBINE
The flowing water spins the turbine blades.



5 GENERATOR
The turbine drives the generator to produce electrical energy.



6 ELECTRICITY
Electricity is stepped up by a transformer and transmitted to the power grid.



SIMPLE SCHEMATIC DIAGRAM

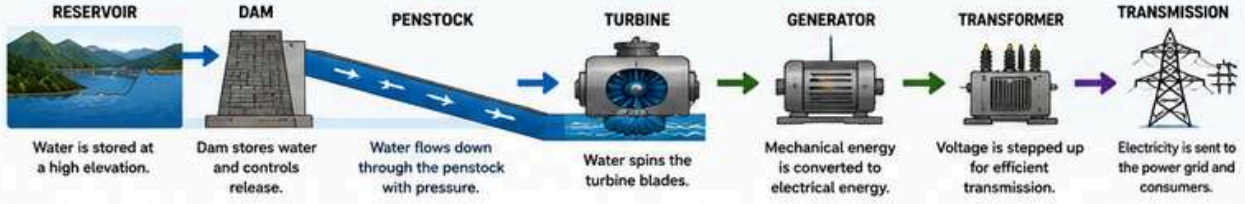

MEMORY HOOK

STORE → FLOW → SPIN → GENERATE

STORE
Water is stored at a high level.

FLOW
Water flows with force.

SPIN
Turbine spins with the water.

GENERATE
Generator produces electricity.

KEY TAKEAWAY

Hydro power plants use the natural flow of water to generate electricity. They are a reliable, renewable, and efficient source of energy with low greenhouse gas emissions.

Watch Video **This Dam Turns Falling Water Into Electricity!**

THE CONCEPT AND THE USAGE OF RENEWABLE ENERGY

- The concept of renewable energy is energy which comes from natural resources such as **sunlight, wind, rain, tides** and **geothermal heat** which are renewable (naturally replenished).
- Renewable energy is often thought of as a new technology, harnessing nature's power has long been used for **heating, transportation, lighting**, and more.

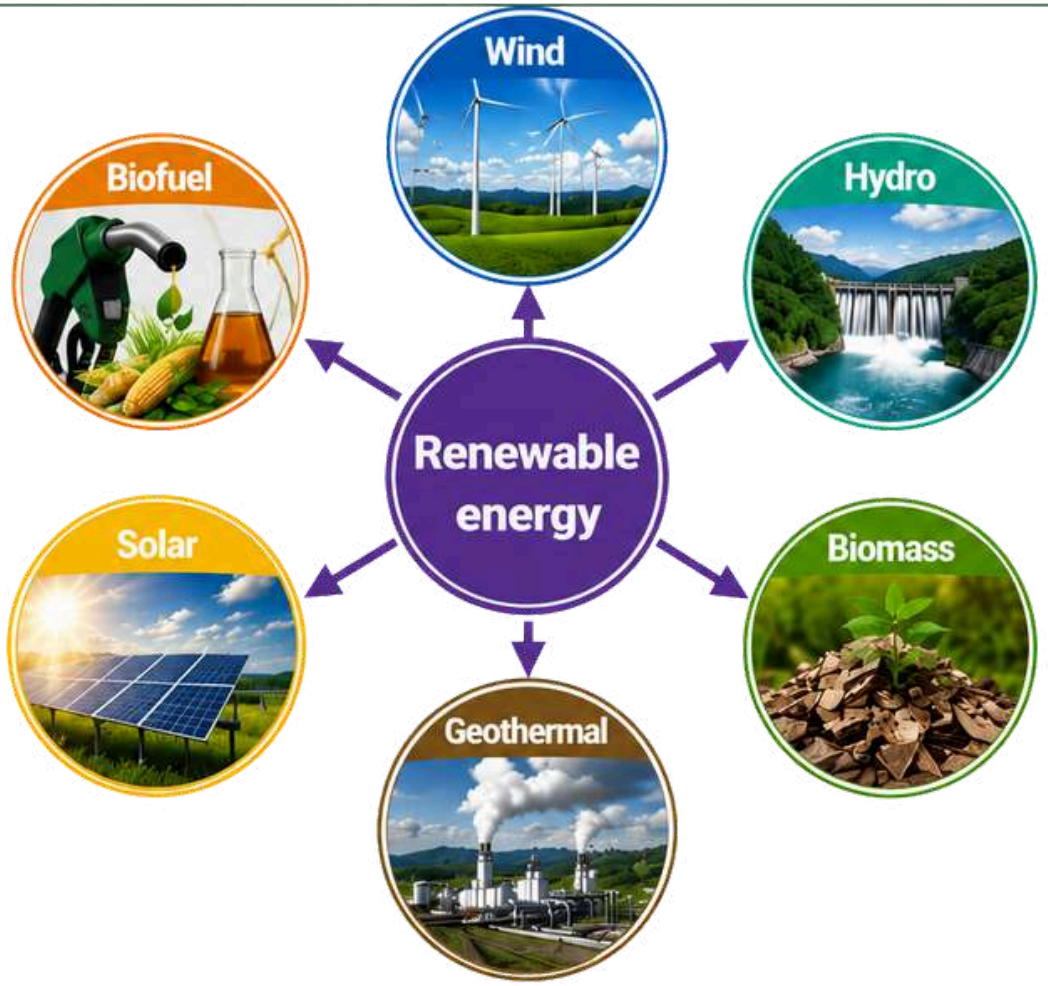

THE ADVANTAGES AND DISADVANTAGES OF RENEWABLE ENERGY (RE) AND NON RE

RENEWABLE ENERGY VS NON-RENEWABLE ENERGY

COMPARING OUR ENERGY CHOICES FOR A BETTER FUTURE

RENEWABLE ENERGY SOURCES











RENEWABLE ENERGY	COMPARISON	NON-RENEWABLE ENERGY
Comes from naturally replenished resources	SOURCE	Comes from limited natural resources
Can be replenished naturally	AVAILABILITY	Takes a very long time to form
Solar, Wind, Hydro, Biomass, Geothermal	EXAMPLES	Coal, Oil, Natural Gas, Nuclear Fuel
Generally produces lower pollution and emissions	ENVIRONMENTAL IMPACT	Generally produces higher pollution and emissions
Suitable for long-term use	SUSTAINABILITY	Limited and may eventually be depleted
Higher initial installation cost in some systems	COST	Fuel and operating costs may continue over time
Some sources depend on weather and location	RELIABILITY	Can generally provide continuous power when fuel is available
Generally lower for some renewable sources	ENERGY DENSITY	Generally higher energy density
CLEAN AND SUSTAINABLE Low emissions, good for the environment and future generations.	MAIN ADVANTAGE	**RELIABLE AND HIGH ENERGY OUTPUT** High energy output, reliable for industries and large-scale needs.
WEATHER / LOCATION DEPENDENT Some sources are not available all the time and need suitable locations.	MAIN LIMITATION	**LIMITED RESOURCES AND ENVIRONMENTAL IMPACT** Finite resources, produces more pollution and contributes to climate change.

NON-RENEWABLE ENERGY SOURCES









QUICK MEMORY GUIDE



RENEWABLE ENERGY

REPLENISH → CLEAN → SUSTAIN

Solar · Wind · Hydro · Biomass · Geothermal

- Can be renewed
- Cleaner
- Sustainable
- Weather-dependent



NON-RENEWABLE ENERGY

EXTRACT → USE → DECREASE

Coal · Oil · Natural Gas · Nuclear Fuel

- Limited supply
- More pollution
- Will eventually decrease
- Fuel-dependent



KEY TAKEAWAY: Renewable energy is the key to a clean, sustainable and secure future for all. Every choice we make today shapes the world we live in tomorrow.

THE IMPORTANCE OF RENEWABLE ENERGY

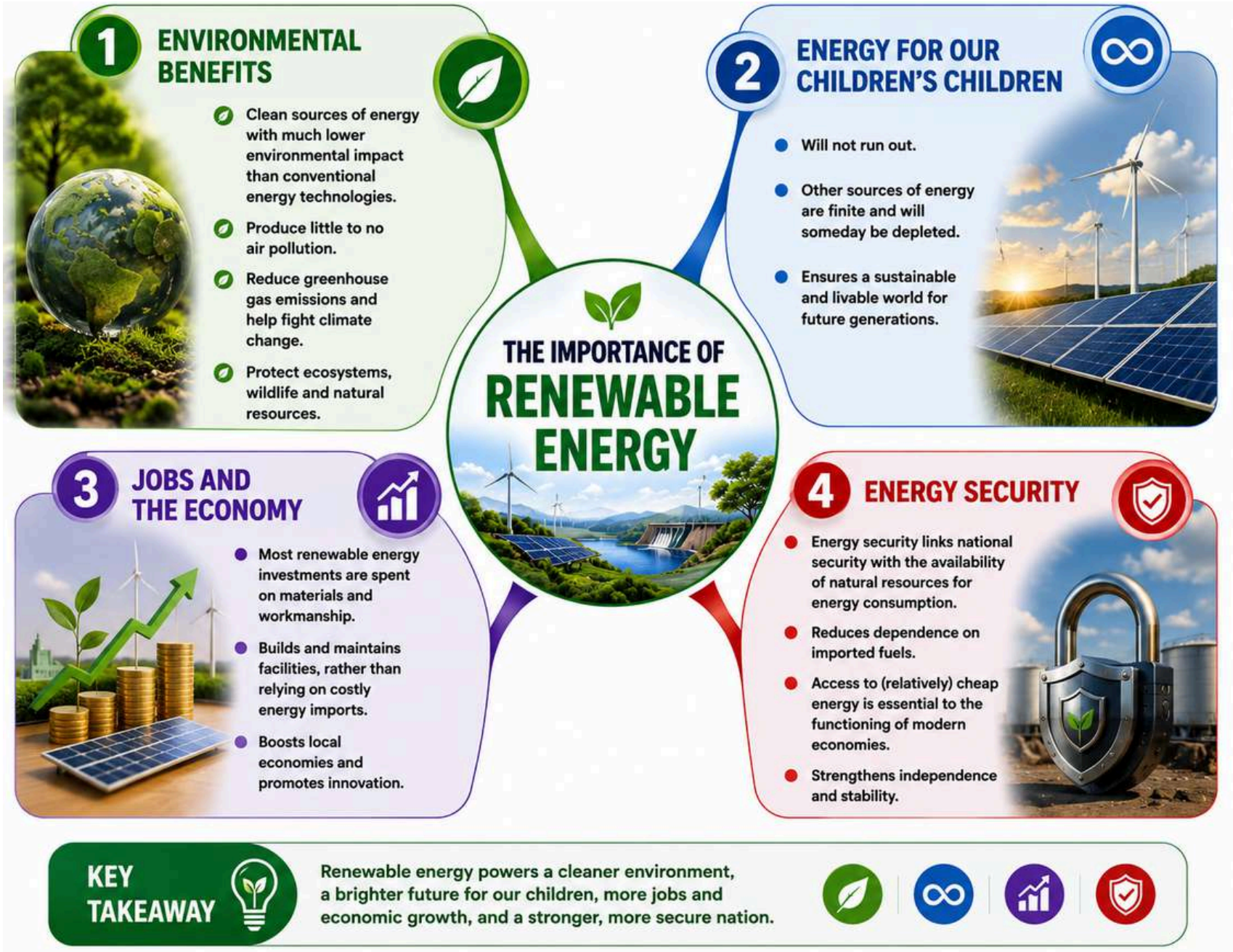



EBOOK POWER SYSTEM

TOPIC 1: INTRODUCTION TO POWER SYSTEM

Test your understanding of how electricity is generated, converted, and delivered.

YOUR PROGRESS

Question 1 of 10

01 / 10

In a thermal power plant, what is the main role of the turbine?

- Store electrical energy
- Convert steam energy into mechanical rotation
- Increase the voltage of transmission lines
- Cool the generator windings

SCAN HERE

2 THREE PHASE SYSTEM



MIND MAP

OVERVIEW TOPIC 2

THREE PHASE SYSTEM

1 BASIC PRINCIPLES

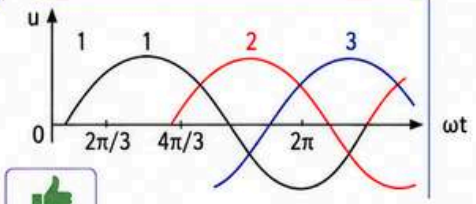

2 CONFIGURATION

3-PHASE CONNECTION

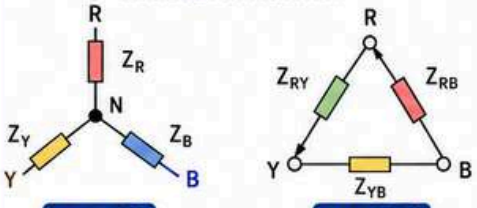

TOTAL POWER

$$P = \sqrt{3}\, V_L\, I_L \cos\theta$$

P = Total real power (W)
V_L = Line voltage (V)
I_L = Line current (A)
θ = Power factor angle

BALANCED LOAD

All three phase impedances are equal in magnitude and phase.

Y (STAR) CONNECTION

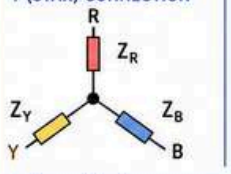

Δ (DELTA) CONNECTION

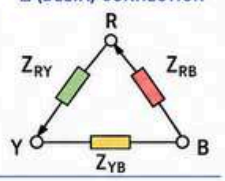

Balanced load:

$Z_R = Z_Y = Z_B = Z_{ph}$

$Z_{RY} = Z_{YB} = Z_{BR} = Z_L$

- **3 PHASE VS 1 PHASE**
  - ADVANTAGES
  - APPLICATION
- **e.m.f GENERATION**
  - WAVEFORM
  - VECTOR

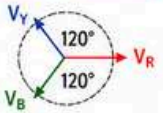

- **CONNECTION & VECTOR DIAGRAM**
  - DELTA (Δ)
  - STAR (Y)

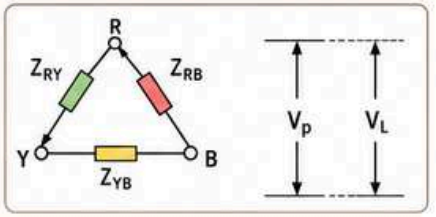

- **DELTA VS STAR**
  - Phase voltage, V_p Phase current, I_p
  - Line voltage, V_L Line current, I_L

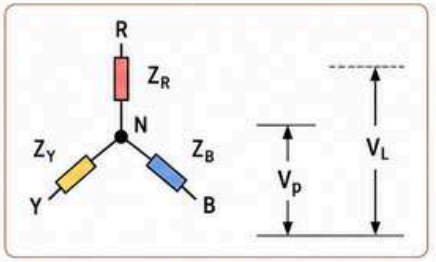



INTRODUCTION

- A three phase circuit is an electrical distribution method that uses three alternating currents to supply power.
- This type of power distribution is the most widely used in the world for transferring power from generating systems to electrical supply grids.
- Generation, transmission and distribution of electricity via the National Grid system is accomplished by three phase alternating currents.

THE BASIC PRINCIPLES OF A THREE PHASE SYSTEM

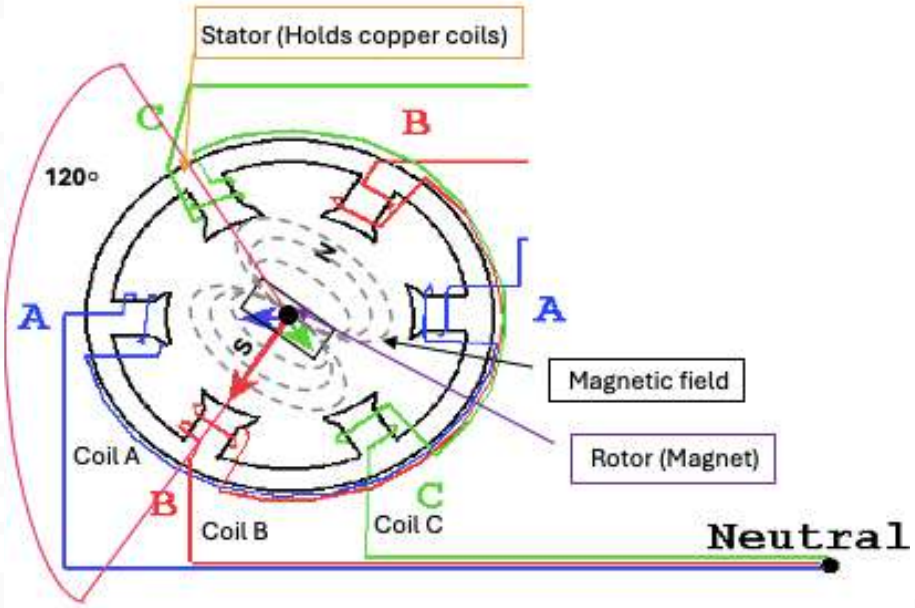

Figure (a): Three coils are placed 120°

- A three phase supply is generated when three coils are placed 120° apart and the whole rotated in a uniform magnetic field as shown in Figure (a).
- The result is three independent supplies of equal voltages which are each displaced by 120° from each other, as shown in Figure (b).

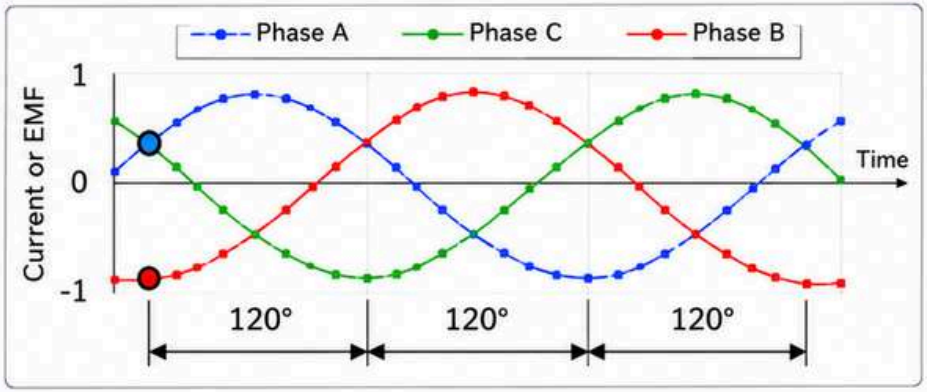

Figure (b): Three independent supplies of equal voltages

THREE PHASE SYSTEM CONFIGURATION

- There are two basic three-phase configurations; **delta** (Δ) and **star** (Y)
- In three phase system, Delta (Δ) also called mesh and star (Y) is known as wye.
- A delta configuration requires only three wires for transmission but a star configuration may have a fourth wire. The fourth wire, if present, is provided as a neutral and is normally grounded.

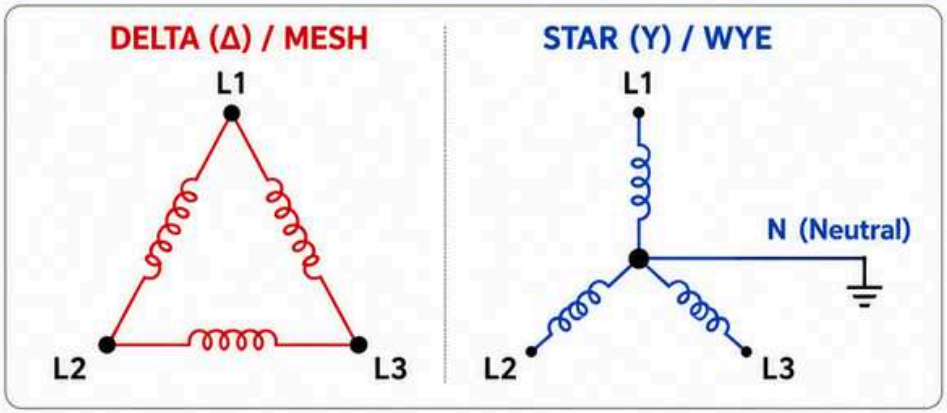

THE ADVANTAGES OF THREE PHASE SYSTEM

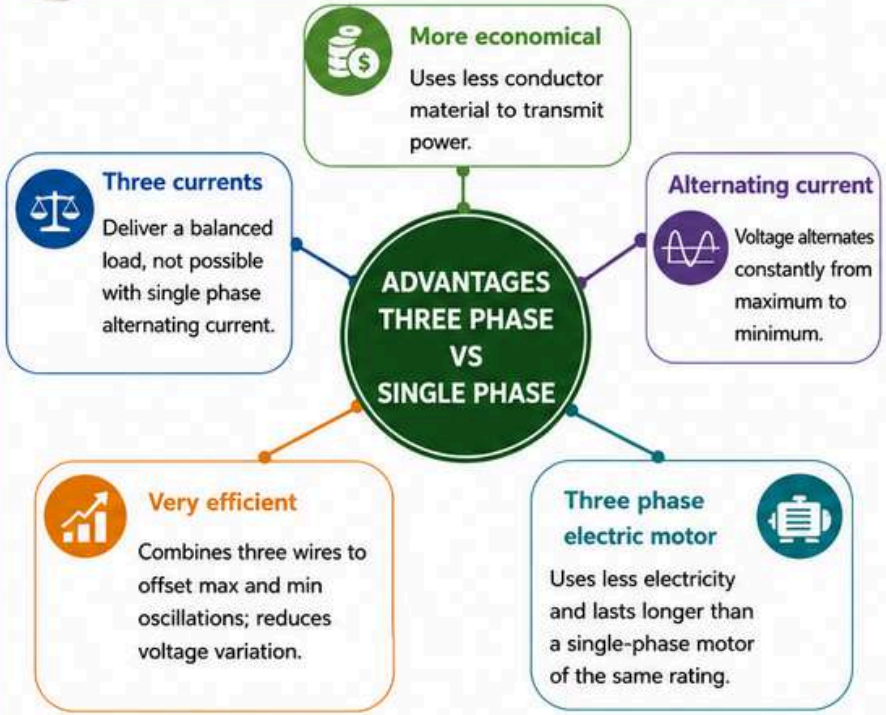

THE APPLICATION OF THREE PHASE SYSTEM

Three phase system	Single phase system
 Almost universally used to distribute electrical power and to supply electricity directly to higher power equipment.	 To supply common domestic and office electrical appliances.
 Commonly used on large motors, pumps and other pieces of mechanical equipment.	 Most households receive electricity in the form of single-phase circuit.

THE THREE PHASE e.m.f GENERATION

- In a 3 phase system, there are three equal voltages or **electromotive force (e.m.f)** of the same frequency having a phase difference of 120°.
- **e.m.f** is produced in a conductor when the conductor is moved across a magnetic field so as to cut through the lines of force (or flux).
- These voltages can be produced by a three-phase AC generator having three identical windings displaced apart from each other by 120° electrical.

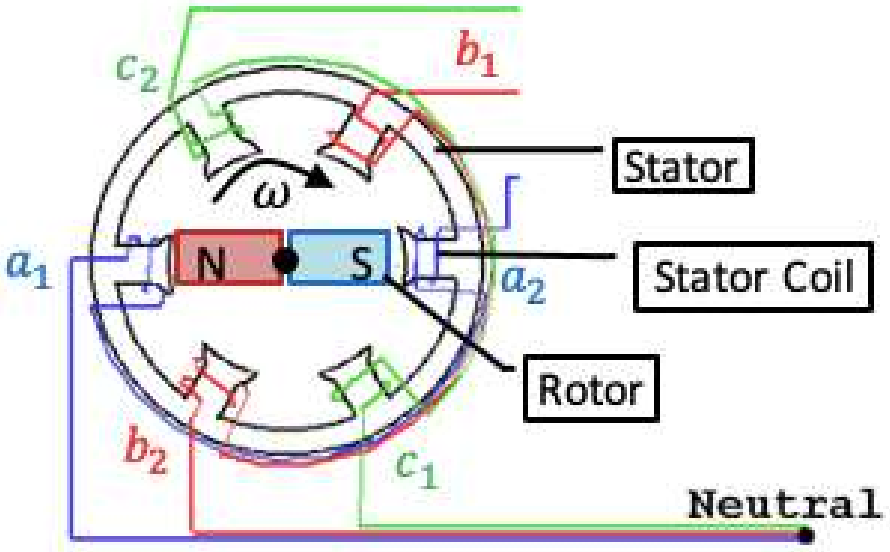

Figure (c): Three phase generator

Based on Figure (c):

- The stator has three identical coils a_1a_2, b_1b_2 and c_1c_2.
- The rotor can be either a permanent magnet or an electromagnet.
- The magnetic field rotates together with the rotor magnet.

THE WAVEFORM OF THREE PHASE e.m.f

Based on Figure (d) and Figure (e):

- a_1, b_1 and c_1 are the starting terminals.
- a_2, b_2 and c_2 are the end terminals.
- The phase difference of 120° has to be maintained between the start terminals a_1, b_1 and c_1.
- Three coils mounted on the same axis, and they are rotated by either keeping coil stationary and moving the magnetic field or vice versa in an anticlockwise direction at (ω) radians per seconds.
- e_{a1a2}, e_{b1b2} and e_{c1c2} are induced in the three coils respectively.

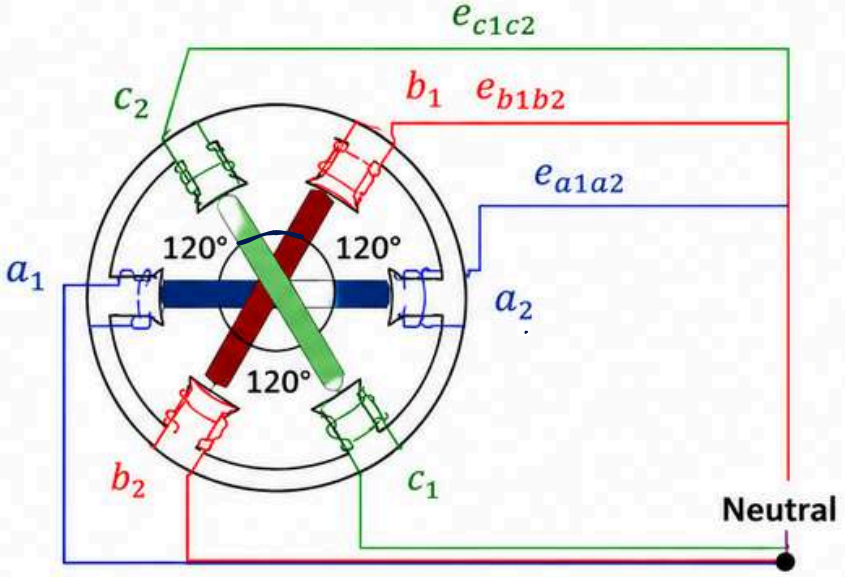

Figure (d): The phase difference of 120°

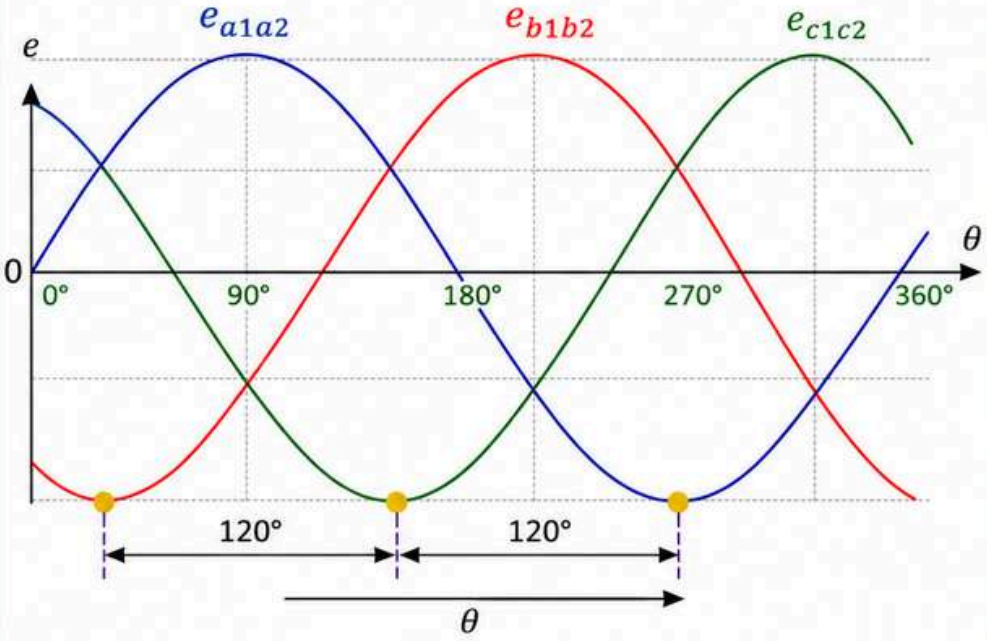

Figure (e): Three e.m.f.s are induced

Watch Video **How 3 Phase Power works: why 3 phases?**

THE VECTOR OF THREE PHASE e.m.f

Based on Figure (f):

- A phasor is a rotating vector. Whereas a vector represents quantity and direction, a phasor represents quantity and displacement measured in a counterclockwise direction.
- The e.m.f.s induced in the three coils in three phase circuits are of the same magnitude and frequency and are displaced by an angle of 120 degrees from each other.

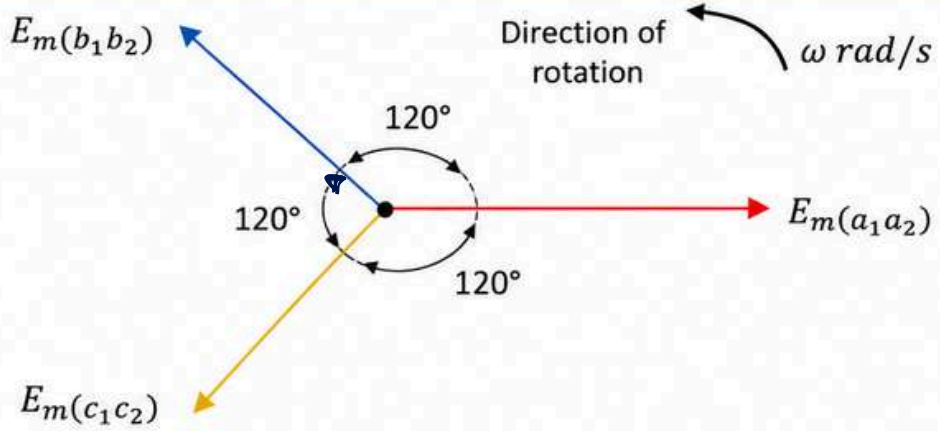

Figure (f): The phasor diagram of three phase e.m.f

These e.m.f.s of three phase circuits can be expressed in the form of the various equations given below:

$$e_{a_1a_2} = E_m \sin \omega t$$

$$e_{b_1b_2} = E_m \sin(\omega t - 2\pi/3) = E_m \sin(\omega t - 120°)$$

$$e_{c_1c_2} = E_m \sin(\omega t - 4\pi/3) = E_m \sin(\omega t - 240°)$$

GENERATOR TRAINER (GENTV)



STEP 1

SCAN HERE
TO START
VIRTUAL LEARNING

STEP 3



LOGO OF GENTV AS THE
TARGET IMAGE (ACCESS KEY)

HOME PAGE

STEP 2

TAP HERE



COPYRIGHT NOTIFICATION NUMBER: CRLY2024M04817

GENTV is an innovation project redesigned from a faulty generator to serve as a generator trainer model based on visual learning for demonstration. It also functions as an interactive teaching aid based on virtual learning, featuring **Augmented Reality (AR)**.

THE CONNECTION OF DELTA AND STAR

Two types of connections in three phase system; delta and star connection.

CONNECTION	CRITERIA	DESCRIPTION
DELTA	• The delta connection has three wires. • No neutral point. • The line voltage of the delta connection is equal to the phase voltage. • It is used for power transmission for short distances.	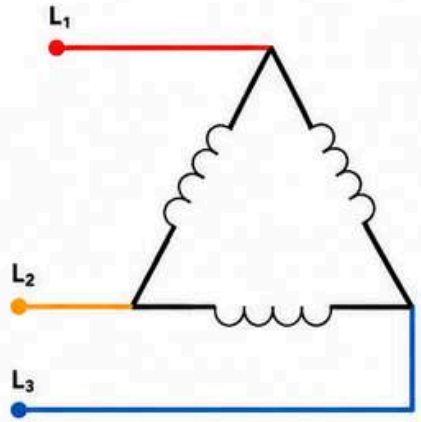 • The end of one load is connected to the start of the next load. • In delta connection each winding receives 400 volts.
STAR	• The star connection requires four wires in which there are three phase conductors and one neutral conductor. • Mainly used for long distance transmission because it has a neutral point. • The neutral point passes the unbalanced current to the earth and hence make the system balance.	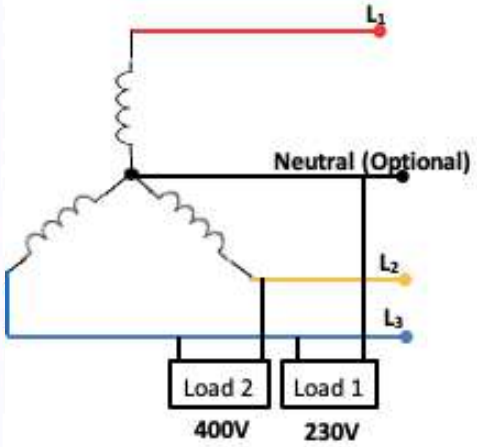 • Three star connected three phase systems gives two different voltages, i.e., 230V and 400V. • The voltage between the single phase and the neutral is 230V. • The voltage between the two phases is equal to the 400V.

THE QUANTITY COMPARISON

KEY REMINDER

V_L = **Line voltage** (voltage between two lines)

V_P = **Phase voltage** (voltage across each phase/winding)

I_L = **Line current** (current in the line/wire)

I_P = **Phase current** (current in each phase/winding)

MEMORY TIP!

Star has $\sqrt{3}$ in voltage.

Delta has $\sqrt{3}$ in current.

ASPECT	STAR (Y)	DELTA (Δ)
CONNECTION *(Visual)*	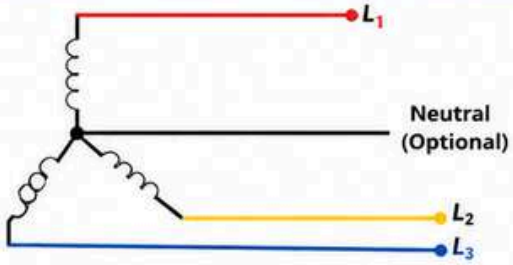	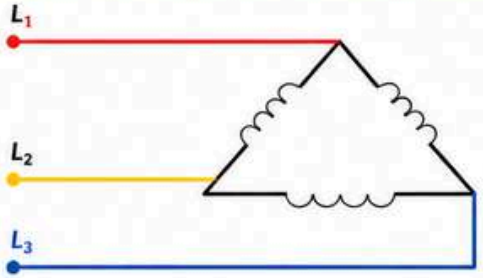
V_L **LINE VOLTAGE** *(between two lines)*	$V_L = \sqrt{3}\,V_P$	$V_L = V_P$
V_P **PHASE VOLTAGE** *(across each phase)*	$V_P = \frac{V_L}{\sqrt{3}}$	$V_P = V_L$
I_L **LINE CURRENT** *(in the line/wire)*	$I_L = I_P$	$I_L = \sqrt{3}\,I_P$
I_P **PHASE CURRENT** *(in each phase)*	$I_P = I_L$	$I_P = \frac{I_L}{\sqrt{3}}$

QUICK RECALL!

STAR (Y): Voltage ↑ $\sqrt{3}$ | Current =

DELTA (Δ): Voltage = | Current ↑ $\sqrt{3}$

Practice makes perfect!

EXAMPLE E2.1

Three loads, each of resistance 30 Ω, are connected in star to a 400 V, three phase supply. Calculate:

i. the system phase voltage, V_p
ii. the phase current, I_p
iii. the line current, I_L

SOLUTION: STEP-BY-STEP APPROACH

Follow these three steps to solve the problem systematically. All steps are explained on the next page for easy reference.

1  **STEP 1:** DRAW THE CIRCUIT DIAGRAM AND LABEL THE GIVEN VALUES

2 

STEP 2: WRITE THE RELEVANT STAR CONNECTION FORMULAS

3  **STEP 3:** CALCULATE THE REQUIRED QUANTITIES

SOLUTION E2.1

1 STEP 1: DRAW THE CIRCUIT DIAGRAM AND LABEL THE GIVEN VALUES

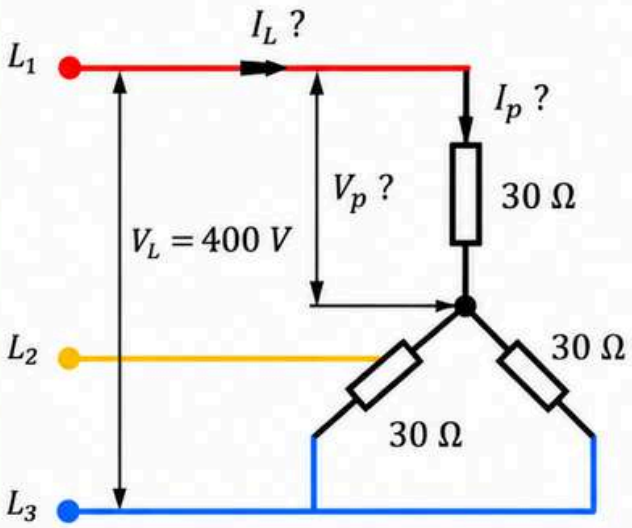

Given:

$V_L = 400\ V$

$Z_p = 30\ \Omega$

2 STEP 2: WRITE THE STAR CONNECTION FORMULAS

$$V_L = \sqrt{3}V_p$$

$$V_p = \frac{V_L}{\sqrt{3}}$$

$$I_L = I_p$$

$$I_p = I_L$$

3 STEP 3: CALCULATE THE REQUIRED QUANTITIES

1. System phase voltage, V_p

$$V_p = \frac{V_L}{\sqrt{3}} = \frac{400}{\sqrt{3}} = \mathbf{230.94\ V}$$

2. Phase current, I_p

Ohm's Law, $V = IR$

$$I_p = \frac{V_p}{Z_p} = \frac{230.94}{30} = \mathbf{7.7\ A}$$

3. Line current, I_L

For star connection, $I_L = I_p$

$$I_L = I_p = \mathbf{7.7\ A}$$



If the connection is changed to a delta connection, will the answer remain the same? Answer yes or no and justify your answer.

EXAMPLE E2.2

A star connected load consists of three identical coils each of resistance 30 Ω and inductance 127.3 mH. If the line current is 5.05 A, calculate the line voltage if the supply frequency is 50 Hz.

SOLUTION: STEP-BY-STEP APPROACH

Follow these three steps to solve the problem systematically, Alπll steps are explained on the next page for easy reference.

1 **STEP 1:** DRAW THE CIRCUIT DIAGRAM AND LABEL THE GIVEN VALUES

2 $\frac{V_p}{I_p}$ **STEP 2:** WRITE THE RELEVANT STAR CONNECTION FORMULAS

3 **STEP 3:** CALCULATE THE REQUIRED QUANTITIES

SOLUTION E2.2

1 STEP 1: DRAW THE CIRCUIT DIAGRAM AND LABEL THE GIVEN VALUES

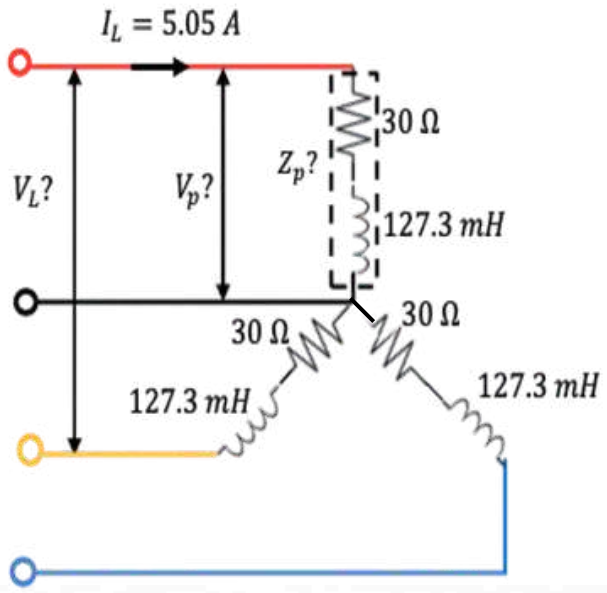

Given:

$R = 30\ \Omega$
$L = 127.3\ mH$
$I_L = 5.05\ A$
$f = 50\ Hz$

2 STEP 2: WRITE THE STAR CONNECTION FORMULAS

$$V_L = \sqrt{3}V_p$$

$$V_p = \frac{V_L}{\sqrt{3}}$$

$$I_L = I_p$$

$$I_p = I_L$$

3 STEP 3: CALCULATE THE REQUIRED QUANTITIES

1. Find the phase impedance, Z_p

Inductive reactance,

$$X_L = 2\pi fL = 2\pi \times 50 \times 127.3\ mH$$
$$= 39.99 \approx \mathbf{40\ \Omega}$$

RL series circuit,

$$Z_p = \sqrt{R^2 + X_L{}^2} = \sqrt{30^2 + 40^2} = \mathbf{50\ \Omega}$$

2. Find the phase voltage, V_p

For star connection, $I_p = I_L = \mathbf{5.05\ A}$

Ohm's Law, $V = IR$

$$V_p = I_p Z_p = 5.05 \times 50 = \mathbf{252.5\ V}$$

3. Find the line voltage, V_L

$$V_L = \sqrt{3}V_p = \sqrt{3} \times 252.5$$
$$= \mathbf{437.34\ V}$$

THINK

If the same coils are reconnected in delta at the same line voltage, will the line current remain at 5.05 A? Support your answer with calculations.

EXAMPLE E2.3

Three identical coils each of resistance 30 Ω and inductance 127.3 mH are connected in delta to a 415 V, 50 Hz, three phase supply. Calculate:

i. The phase current, I_p

ii. The line current, I_L

SOLUTION: STEP-BY-STEP APPROACH

Follow these three steps to solve the problem systematically. All steps are explained on the next page for easy reference.

1 **STEP 1:** DRAW THE CIRCUIT DIAGRAM AND LABEL THE GIVEN VALUES

2 **STEP 2:** WRITE THE RELEVANT DELTA CONNECTION FORMULAS

3 **STEP 3:** CALCULATE THE REQUIRED QUANTITIES

SOLUTION E2.3

1 STEP 1: DRAW THE CIRCUIT DIAGRAM AND LABEL THE GIVEN VALUES

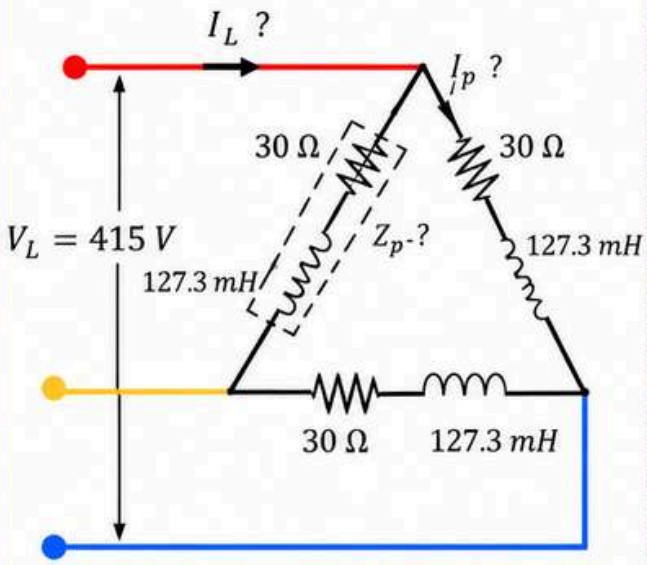

Given:

$V_L = 415\ V$
$R = 30\ \Omega$
$L = 127.3\ mH$
$f = 50\ Hz$

2 STEP 2: WRITE THE DELTA CONNECTION FORMULAS

$$V_L = V_p$$

$$V_p = V_L$$

$$I_L = \sqrt{3} I_p$$

$$I_p = \frac{I_L}{\sqrt{3}}$$

3 STEP 3: CALCULATE THE REQUIRED QUANTITIES

1. Find the phase impedance, Z_p

Inductive reactance,

$$X_L = 2\pi f L = 2\pi \times 50 \times 127.3\ mH$$
$$= 39.99 \approx \mathbf{40\ \Omega}$$

RL series circuit,

$$Z_p = \sqrt{R^2 + X_L^2} = \sqrt{30^2 + 40^2} = \mathbf{50\ \Omega}$$

2. Find the phase current, I_p

$$V_p = V_L = \mathbf{415\ V}$$

$$I_p = \frac{V_p}{Z_p} = \frac{415}{50} = \mathbf{8.3\ A}$$

3. Find the line current, I_L

$$I_L = \sqrt{3} I_p = \sqrt{3} \times 8.3$$
$$= \mathbf{14.38\ A}$$

THINK **If the supply frequency increases while the line voltage remains at 415 V, how will the phase current and line current change? Explain your reasoning.**

EXAMPLE E2.4

Three identical capacitors are connected in delta to a 440 V, 50 Hz, three phase supply. If the line current is 10 A, calculate the capacitance of each of the capacitors.

SOLUTION: STEP-BY-STEP APPROACH

Follow these three steps to solve the problem systematically. All steps are explained on the next page for easy reference.

1. **STEP 1:** DRAW THE CIRCUIT DIAGRAM AND LABEL THE GIVEN VALUES
2. **STEP 2:** WRITE THE RELEVANT DELTA CONNECTION FORMULAS
3. **STEP 3:** CALCULATE THE REQUIRED QUANTITIES

SOLUTION E2.4

1 STEP 1: DRAW THE CIRCUIT DIAGRAM AND LABEL THE GIVEN VALUES

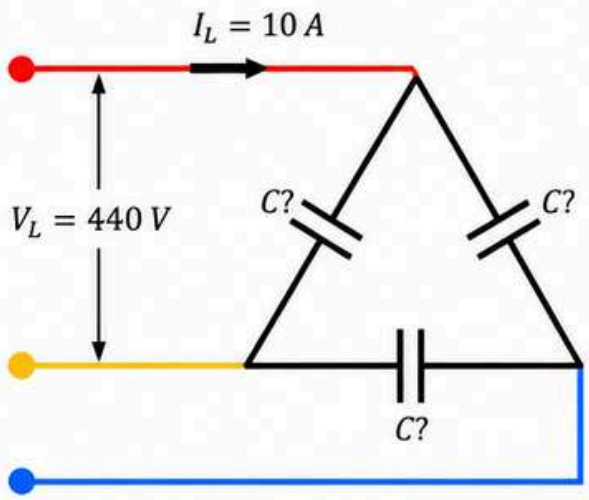

Given:

$$V_L = 440\ V$$
$$I_L = 10\ A$$
$$f = 50\ Hz$$

2 STEP 2: WRITE THE RELEVANT DELTA CONNECTION FORMULAS

$$V_L = V_p$$

$$V_p = V_L$$

$$I_L = \sqrt{3} I_p$$

$$I_p = \frac{I_L}{\sqrt{3}}$$

3 STEP 3: CALCULATE THE REQUIRED QUANTITIES

1. Find the phase current, I_p

For delta connection,

$$I_p = \frac{I_L}{\sqrt{3}} = \frac{10}{\sqrt{3}} = \mathbf{5.77\ A}$$

2. Find the phase impedance, Z_p

Ohm's Law, $V = IR$

$$Z_p = \frac{V_p}{I_p} = \frac{440}{5.77} = \mathbf{76.26\ \Omega}$$

Since capacitive load,

$$Z_p = X_C = 76.26\ \Omega$$

3. Calculate the capacitance, C

$$X_C = \frac{1}{2\pi f C}$$

$$C = \frac{1}{2\pi f X_C} = \frac{1}{2\pi \times 50 \times 76.26}$$

$$= \mathbf{41.74\ \mu F}$$

THINK

In a delta connection, what is the relationship between line voltage and phase voltage? What voltage is applied across each capacitor?

BALANCED LOAD IN A THREE PHASE SYSTEM

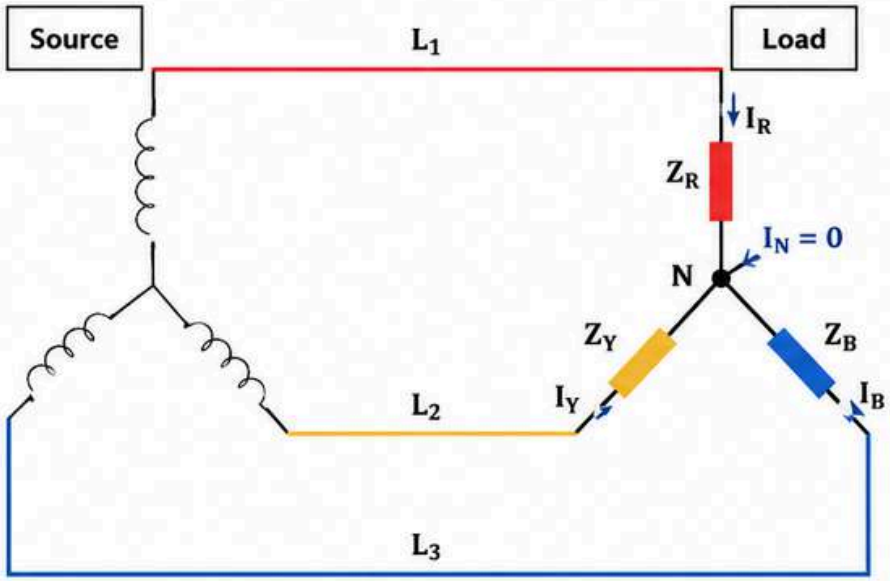

Figure (g): Three phase balanced system

Based on Figure (g):

- It is the load which decides if a system is balanced or unbalanced.
- In three phase system, phase voltages or currents are displaced from each other by 120°.
- This is because, the windings of a generator are placed 120° apart from each other.
- A star connected winding as shown in the figure is connected to the load and it is called a system.
- An equal load is connected on each winding and the load is identical, current flows through each phase is same.
- Hence, phase angle between voltage and current is perfectly 120° as shown in Figure 2.12.
- The three load is perfectly identical and on all three phases current flows through neutral is also zero.
- Therefore, remove the neutral conductor without affecting the voltage and current in the circuit.
- This is only applicable for perfectly balanced system i.e. system with identical load on each phase.

PROPERTIES OF BALANCED SYSTEM

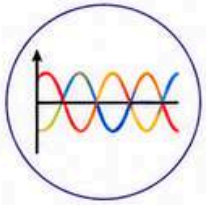

Waveform is perfectly sinusoidal i.e. in-terms of magnitude and phase shift of 120°.

$I_R = I_Y = I_B$

Current flows through each phase is same.

$I_N = 0$

No current flows through the neutral.



Power loss is very low or not present.

POWER IN THREE PHASE SYSTEM

BASIC CONCEPT

- The power dissipated in three phase load is given by the sum of the power dissipated in each phase.
- If a load is balanced then the total power, P is given by:

$$P = 3\,x \quad \textit{power consumed by one phase}$$

POWER IN ONE PHASE

- The power consumed in one phase:

$$P_{1\phi} = I_p^{\,2} R_p$$
$$\text{or } V_p I_p \cos\phi$$

the phase angle between V_p and I_p

SYMBOL / TERMINOLOGY

SYMBOL	DESCRIPTION
P	Total three phase power (Watt, W)
$P_{1\phi}$	Power in one phase (Watt, W)
I_p	Phase current (Ampere, A)
V_p	Phase voltage (Volt, V)
R_p	Phase resistance (Ohm, Ω)
ϕ	Phase angle between V_p and I_p (degree, °)

MAIN FORMULA (MOST IMPORTANT!)

$$P = \sqrt{3}\, V_L\, I_L \cos\phi \text{ watts}$$

- V_L = Line voltage (voltage between two lines)
- I_L = Line current (current in the line/wire)
- $\cos\phi$ = Power factor (unitless)
- ϕ = Phase angle between V_p and I_p

MEMORY TIP!

For balanced system:

- ✔ $P = \sqrt{3}\, V_L I_L \cos\phi$
- ✔ Or $P = 3\, I_p^2\, R_p$
- ✔ And $P = 3\,x$ power consumed by one phase

ALTERNATE FORMS (STAR OR DELTA BALANCED CONNECTION)

Hence for either a star or a delta balanced connection the total power P is given by:

$$P = \sqrt{3}\, V_L I_L \cos\phi \text{ watts} \quad \text{OR} \quad P = 3\, I_p^2\, R_p \text{ watts}$$

TOTAL VOLT-AMPERES (APPARENT POWER)

Total volt-amperes, S:

$$S = \sqrt{3}\, V_L I_L \text{ volt} - \text{amperes}$$

WHERE

- S = Apparent power (Volt – amperes, VA)
- V_L = Line voltage (V)
- I_L = Line current (A)

NOTE: These formulas are valid for any balanced three phase system, whether star (Y) or delta (Δ) connected.

KEY TAKEAWAYS

- 3x — Total power is 3 times the power in one phase.
- Use $V_p I_p \cos\phi$ for AC circuits (most common).
- Use $I_p^2 R_p$ if resistance of each phase is known.
- Balanced load means equal load on all three phases.
- No neutral current in balanced system ($I_N = 0$).

EXAMPLE E2.5

Three 12 Ω resistors are connected in star to a 440 V, three phase supply. Calculate the total power dissipated by the resistors.

SOLUTION: STEP-BY-STEP APPROACH

Follow these three steps to solve the problem systematically. All steps are explained on the next page for easy reference.

1 **STEP 1:** DRAW THE CIRCUIT DIAGRAM AND LABEL THE GIVEN VALUES

2 $\frac{V_p}{I_p}$ **STEP 2:** SELECT THE APPROPRIATE TOTAL POWER FORMULA BASED ON THE GIVEN VALUES

3 **STEP 3:** CALCULATE THE TOTAL POWER

SOLUTION E2.5

1 STEP 1: DRAW THE CIRCUIT DIAGRAM AND LABEL THE GIVEN VALUES

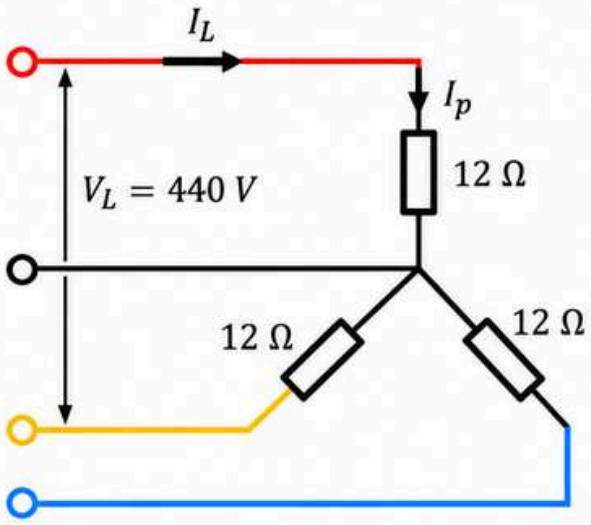

Given:

$$V_L = 440\ V$$
$$R_p = 12\ \Omega$$

2 STEP 2: SELECT THE APPROPRIATE TOTAL POWER FORMULA BASED ON THE GIVEN VALUES

$$P = 3I_p{}^2 R_p$$

3 STEP 3: CALCULATE THE TOTAL POWER

1. Find the phase voltage, V_p

For star connection,

$$V_p = \frac{V_L}{\sqrt{3}} = \frac{440}{\sqrt{3}} = \mathbf{254.03\ V}$$

2. Find the phase current, I_p

Ohm's Law, $V = IR$

$$I_p = \frac{V_p}{R_p} = \frac{254.03}{12} = \mathbf{21.17\ A}$$

3. Calculate the total power, P

$$P = 3I_p{}^2 R_p$$
$$= 3 \times (21.17)^2 \times 12$$
$$= \mathbf{16.13\ kW}$$

THINK

If the resistance of each resistor doubles while the line voltage remains at 440 V, how will the total power change? Explain using the relationship between voltage, resistance and power.

EXAMPLE E2.6

The input power to a three phase a.c. motor is measured as 5 kW. If the voltage and current to the motor are 415 V and 8.4 A, respectively, calculate the power factor of the system.

SOLUTION: STEP-BY-STEP APPROACH

Follow these two steps to solve the problem systematically. All steps are explained on the next page for easy reference.

1 **STEP 1:** LIST THE GIVEN VALUES TO DETERMINE THE APPROPRIATE FORMULA

2 **STEP 2:** CALCULATE THE POWER FACTOR

SOLUTION E2.6

1 STEP 1: LIST THE GIVEN VALUES TO DETERMINE THE APPROPRIATE FORMULA

The input power to a three phase a.c. motor is measured as 5 kW. If the voltage and current to the motor are 415 V and 8.4 A, respectively, calculate the power factor of the system.

Given:

Input power, $P = 5\ \text{kW} = 5000\ \text{W}$

Line voltage, $V_L = 415\ \text{V}$

Line current, $I_L = 8.4\ \text{A}$

2 STEP 2: CALCULATE THE POWER FACTOR

1. Use the total power formula for a three phase system.

$$P = \sqrt{3}\, V_L I_L \cos\theta$$

On the other hand,

$$power\ factor,\ pf = \cos\theta$$

Therefore,

2. Calculate the power factor.

$$pf = \cos\theta = \frac{P}{\sqrt{3}\, V_L I_L}$$

$$= \frac{5000}{\sqrt{3} \times 415 \times 8.4}$$

$$= \mathbf{0.828}$$



What is the difference between real power, measured in kW and apparent power, measured in kVA?

EXAMPLE E2.7

Three identical coils, each of resistance 9 Ω and inductance 35 mH are connected:

a) in star and

b) in delta

to a 400 V, 60 Hz, three phase supply. Calculate the total power dissipated in each case.

SOLUTION: STEP-BY-STEP APPROACH

Follow these three steps to solve the problem systematically. All steps are explained on the next page for easy reference.

1 **STEP 1:** DRAW THE CIRCUIT DIAGRAM AND LABEL THE GIVEN VALUES

2 $\frac{V_p}{I_p}$ **STEP 2:** SELECT THE APPROPRIATE TOTAL POWER FORMULA BASED ON THE GIVEN VALUES

3 **STEP 3:** CALCULATE THE TOTAL POWER

SOLUTION E2.7(a)

1 STEP 1: DRAW THE CONNECTION AND PUT THE VALUE GIVEN

Star connection (Y)

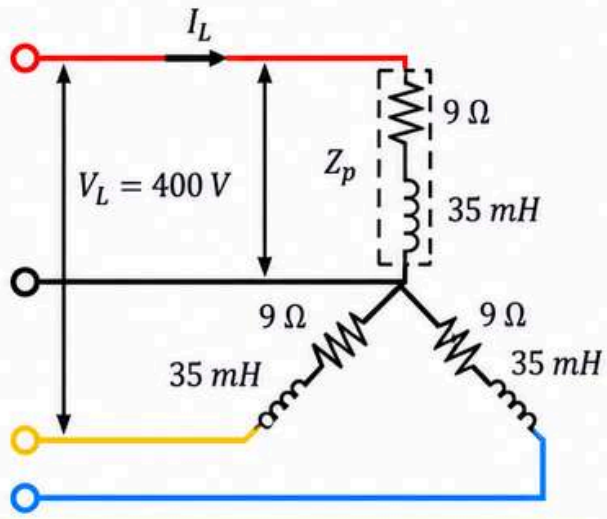

Given:

$R = 9\ \Omega$
$L = 35\ mH$
$V_L = 400\ V$
$f = 60\ Hz$

2 STEP 2: SELECT THE APPROPRIATE TOTAL POWER FORMULA BASED ON THE GIVEN VALUES

$$P = \sqrt{3} V_L I_L \cos\phi$$

Where:

P = total three-phase power (W)
V_L = line voltage (V)
I_L = line current (A)
$\cos\phi$ = power factor

3 STEP 3: CALCULATE THE TOTAL POWER (STAR CONNECTION)

1. Find the phase voltage, V_p

For star connection,

$$V_p = \frac{V_L}{\sqrt{3}} = \frac{400}{\sqrt{3}} = \mathbf{230.94\ V}$$

2. Find the phase current, I_p

$$Z_p = \sqrt{R^2 + {X_L}^2}$$

$$X_L = 2\pi fL = 2\pi \times 60 \times 35mH = 13.19 \approx 13\ \Omega$$

$$Z_p = \sqrt{9^2 + 13^2} = 15.81\ \Omega$$

$$I_p = \frac{V_p}{Z_p} = \frac{230.94}{15.81} = \mathbf{14.61\ A}$$

Impedance triangle

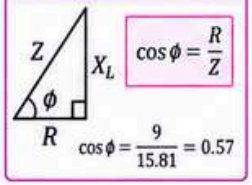

3. Calculate the total power, P

$$P = \sqrt{3} V_L I_L \cos\phi = \sqrt{3} \times 400 \times 14.61 \times 0.57$$
$$= \mathbf{5.8\ kW}$$

Alternatively,

$$P = 3{I_p}^2 R_p = 3 \times 14.61^2 \times 9 = \mathbf{5.8\ kW}$$



Will the coil impedance and power factor change when the connection changes from star to delta at the same frequency? Explain your reasoning.

SOLUTION E2.7(b)

1 STEP 1: DRAW THE CONNECTION AND PUT THE VALUE GIVEN

Delta connection (Δ)

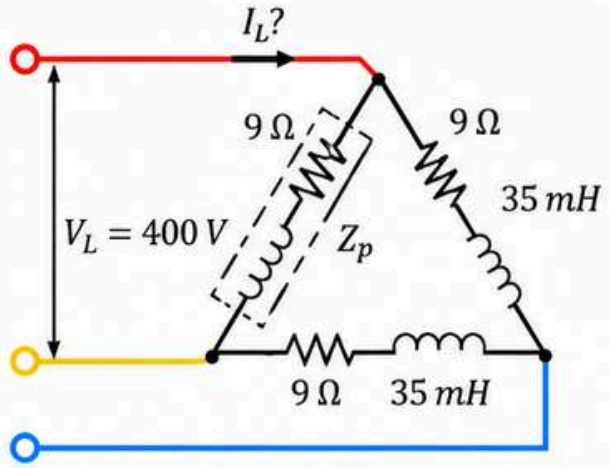

Given:

$R = 9\ \Omega$
$L = 35\ mH$
$V_L = 400\ V$
$f = 60\ Hz$

2 STEP 2: SELECT THE APPROPRIATE TOTAL POWER FORMULA BASED ON THE GIVEN VALUES

$$P = \sqrt{3} V_L I_L \cos\phi$$

Where:

P = total three-phase power (W)
V_L = line voltage (V)
I_L = line current (A)
$\cos\phi$ = power factor

3 STEP 3: CALCULATE THE TOTAL POWER (DELTA CONNECTION)

1. Determine the phase voltage, V_p

For delta connection,

$$V_p = V_L = 400\ V$$

2. Determine the phase current, I_p

$$Z_p = \sqrt{R^2 + X_L{}^2}$$

$$X_L = 2\pi f L = 2\pi \times 60 \times 35mH = 13.19 \approx 13\ \Omega$$

$$Z_p = \sqrt{9^2 + 13^2} = 15.81\ \Omega$$

$$I_p = \frac{V_p}{Z_p} = \frac{400}{15.81} = \mathbf{25.3\ A}$$

Impedance triangle

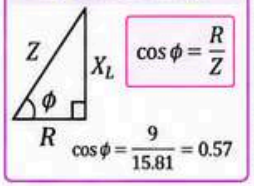

Line current,

$$I_L = \sqrt{3} I_p = \sqrt{3} \times 25.3 = \mathbf{43.82\ A}$$

3. Calculate the total power, P

$$P = \sqrt{3} V_L I_L \cos\phi = \sqrt{3} \times 400 \times 43.82 \times 0.57$$
$$= \mathbf{17.3\ kW}$$

Alternatively,

$$P = 3 I_p{}^2 R_p = 3 \times 25.3^2 \times 9 = \mathbf{17.3\ kW}$$



At the same line voltage and frequency, how does the total power in delta compare with that in star? Derive the relationship and support it with your calculated values.

INTERACTIVE PAGE

PROBLEMS RELATED TO THREE PHASE SYSTEM

Solve the following problems.

P2.1

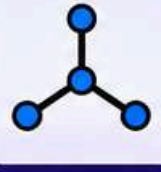

A star connected load consists of three identical coils, each of impedance 50 Ω. If the supply frequency is 60 Hz, the line current is 1.3 A and the power factor is 0.89, calculate:

i. the phase voltage
ii. the line voltage
iii. total power

P2.2

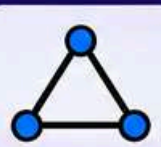

A delta connected load consists of three identical coils, each of inductance 130 mH and resistance 40 Ω. If the supply frequency is 50 Hz and the supply voltage is 400 V, calculate:

i. the phase current
ii. the line current

P2.3



Three 24 μF capacitors are connected in star across a 415 V, 50 Hz, three-phase supply. What value of capacitance must be connected in delta in order to take the same line current?

Try It Yourself First, Then Check the Solution!

SOLUTION

INTERACTIVE PAGE

P2.4



The input voltage, current and power to a motor is measured as 440 V, 17.43 A and 8.1 kW, respectively. Determine the power factor of the system.

P2.5

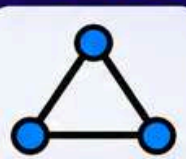

Three inductive loads, each of resistance 4 Ω and reactance 9 Ω, are connected in delta. When connected to a three phase supply the loads consume 1.2 kW. Calculate:

i. the power factor of the load
ii. the phase current
iii. the line current
iv. the supply voltage

P2.6



Each phase of a delta connected load comprises a resistance of 40 Ω and a 40 μF capacitor in series. Determine, when connected to a 400 V, 60 Hz, three-phase supply:

i. the phase current
ii. the line current
iii. the total power dissipated
iv. the kVA rating of the load.

P2.7

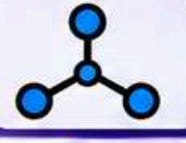

A star connected load consists of three identical coils, each of inductance 173.2 mH and resistance 40 Ω. If the supply frequency is 50 Hz and the line current is 5 A, determine

i. the phase voltage
ii. the line voltage.





TOPIC 2: THREE PHASE SYSTEM

SCAN HERE

https://wayground.com/join?gc=48739917&source=liveDashboard

3 TRANSFORMER



MIND MAP

OVERVIEW TOPIC 3

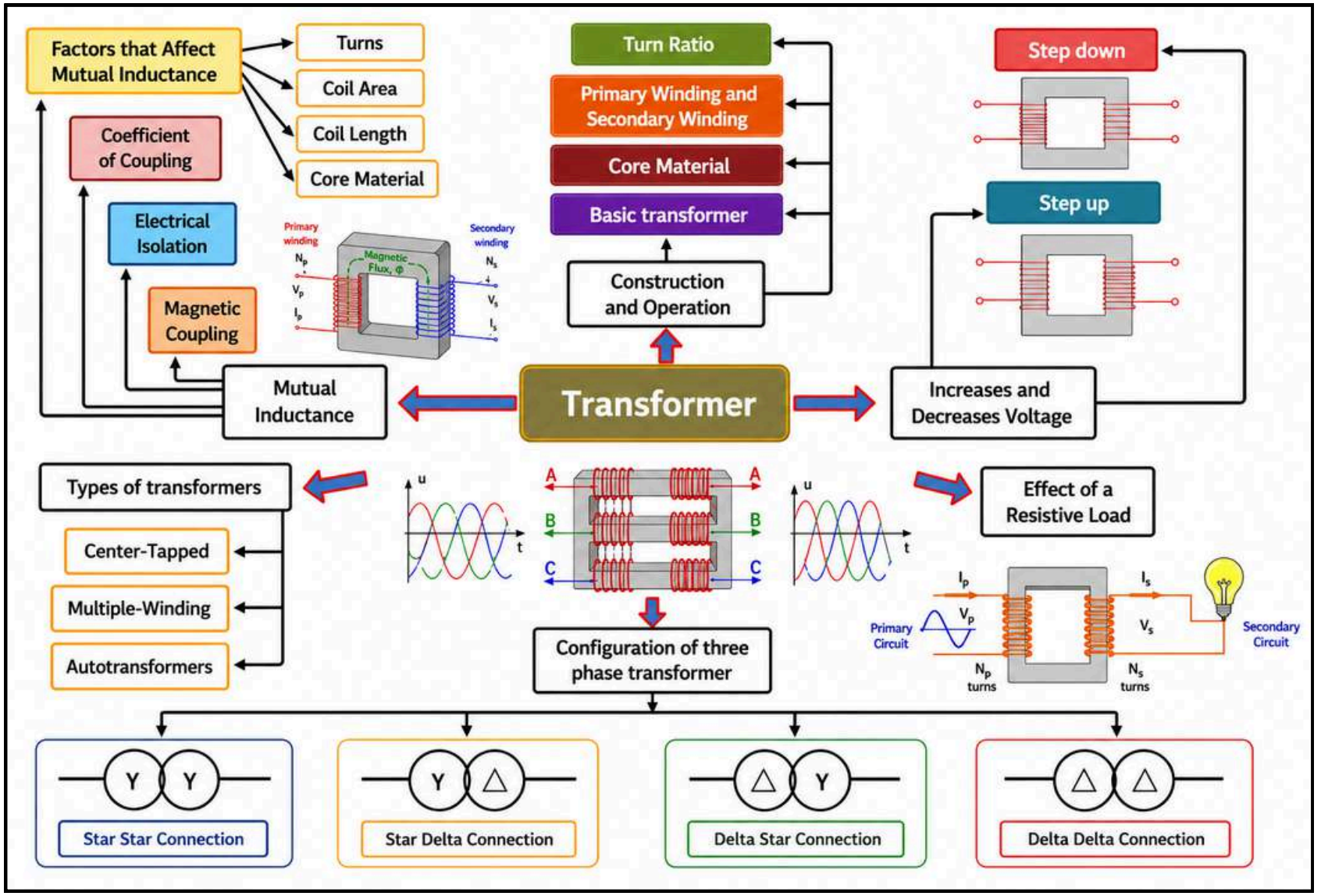

INTRODUCTION

- In Peninsular Malaysia, **Tenaga Nasional Berhad (TNB)** is the only electric utility company.
- Transformer is one of the main equipment in TNB distribution system which can be categorised into **power transformer** and **distribution transformer**.

POWER TRANSFORMER



- Power transformer (7.5 MVA and above) is mainly used in main intake substation and main distribution substation.
- It steps down the high transmission voltage to a lower distribution voltage level.
- It is designed to handle large power capacity.

DISTRIBUTION TRANSFORMER



- Distribution transformer (1000 kVA and below) is usually utilised in electrical substation.
- It steps down the distribution voltage to a utilisation voltage (e.g. 415/240 V).
- It is used to supply electrical energy to consumers such as residential, commercial and industrial loads.

Watch Video **How a Power Transformer Works | Animated Breakdown**

MUTUAL INDUCTANCE

A change in one coil induces a voltage in another coil

- Mutual **inductance** is the property of the coil due to which it **opposes the change of current** in the other coil, or in the neighbouring coil.
- In a transformer, **changing the current in the primary coil** causes an **induced voltage** in the secondary coil. ***Flux, ϕ*** from the primary coil passes into the secondary coil.
- Mutual induction – **changing current in one coil** produces an **induced voltage** in another coil.



1 When the **current (I_1)** in the primary coil **changes** ...

2 ... a **changing magnetic flux (ϕ)** is produced, which **links both coils.**

3 ... an **induced voltage (E_2)** is generated in the secondary coil.

A change in current in one coil induces a voltage in another coil.

ELECTRICAL ISOLATION

Safe Separation for a Safer Tomorrow

- The ability to couple **one circuit to another without** the use of **direct wire connections.**
- To transfer power from one circuit to another without the use of interconnecting conductors between the two circuits.
- Transformers designed to provide **electrical isolation** without stepping voltage and current either up or down are called **isolation transformers.**

Isolation Transformer

Primary Circuit (Input)

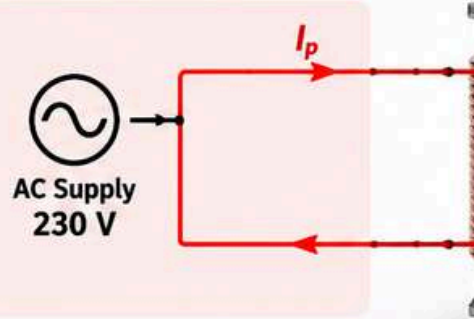

- Connected to the mains supply.
- Alternating current produces a changing magnetic flux in the core.



Secondary Circuit (Output)



- Electrically isolated from the primary circuit (no direct wire connection).
- Power is transferred through the magnetic field.

WHY IS IT USED?

Safety
Protects users from electric shock.

Reduces noise and interference
Isolates sensitive equipment.

Breaks ground loops
Prevents unwanted current paths.

Common applications
Medical equipment, laboratory instruments, computers and electronic devices.

Key Point: *An isolation transformer transfers power through a magnetic field, providing electrical isolation for safety purposes.*

Isolation Today A Safer Tomorrow

COEFFICIENT OF COUPLING

It indicates how much magnetic flux links both coils.

- The **fraction of magnetic flux** produced by the current in one coil that links with the other coil is called the **coefficient of coupling** between the two coils. It is denoted by **(k)**.
- Two coils, coil A and coil B, when current flows through one coil it produces flux; the whole flux may not link with the other coil, and this is because of **leakage flux** by a fraction **(k)** known as coefficient of coupling.
- **k = 1**, when the flux produced by one coil, **completely links** with the other coil and is called **magnetically tightly coupled.**
- **k = 0**, when the flux produced by one coil, **does not link** at all with the other coil and thus the coils are said to be **magnetically isolated.**

k = 1 (Magnetically Tightly Coupled)

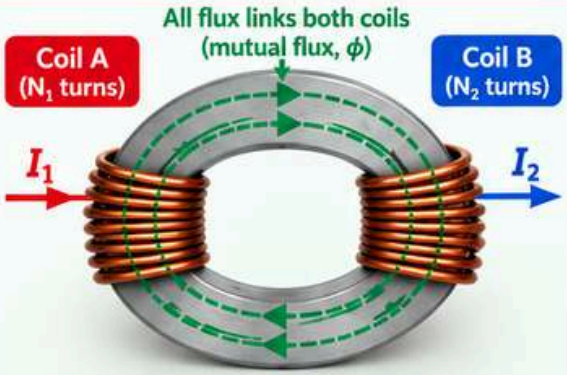

- All the magnetic flux produced by coil A links with coil B.
- No leakage flux.
- **k = 1** (100% coupling).
- Coils are **magnetically tightly coupled.**

Two Magnetically Coupled Coils (General Case)

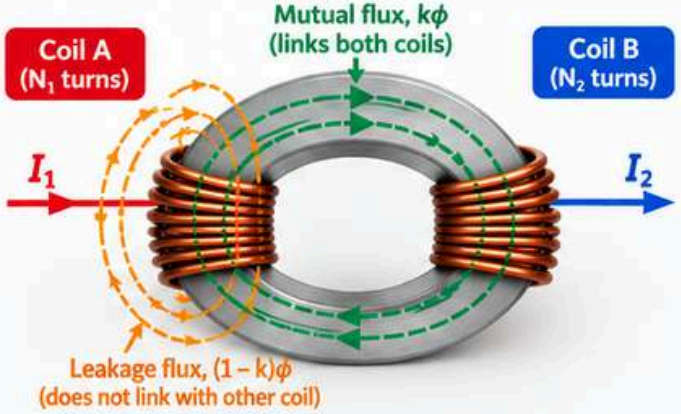

- A fraction of the magnetic flux produced by coil A links with coil B.
- The remaining flux is leakage flux (only from coil A).
- **0 < k < 1.**
- Coils are **magnetically coupled.**

k = 0 (Magnetically Isolated)



- The magnetic flux produced by coil A does not link with coil B.
- All the flux is leakage flux (only from coil A).
- **k = 0** (no coupling).
- Coils are **magnetically isolated.**

Key Point: *The coefficient of coupling (k) indicates how much of the magnetic flux produced by one coil links with the other coil.*

FACTORS THAT AFFECT MUTUAL INDUCTANCE

Understand the factors
Design for better coupling

1 Number of wire wraps or turns in the coil

More turns of wire means that the coil will generate a greater amount of magnetic field for a given amount of coil current.

Less inductance (Fewer turns)	More inductance (More turns)
	
e.g. 5 turns	e.g. 50 turns

2 Coil area

A **larger coil area** allows more magnetic flux to link with the coil, resulting in greater mutual inductance.

Less inductance (Smaller coil area)	More inductance (Larger coil area)
	
Small diameter	Large diameter

FACTORS THAT AFFECT MUTUAL INDUCTANCE



3 Coil length

A longer path for the magnetic field flux to take results in more opposition to the formation of that flux for any given amount of field force.

More inductance (Shorter coil length)	Less inductance (Longer coil length)
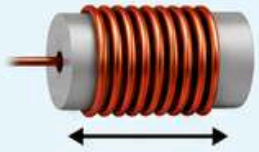	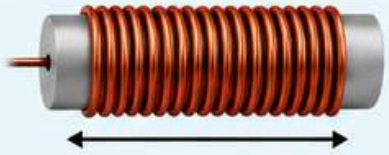
Shorter coil length	Longer coil length

4 Core material

- A core material with greater magnetic permeability results in greater magnetic field flux for any given amount of field force.

Less inductance (Air core)	More inductance (Soft iron core)
	
Air core (permeability μ = 1)	Soft iron core (permeability μ ≈ 600)

KEY POINT: Mutual inductance increases with **more turns, larger coil area, shorter coil length** and **higher permeability core material.**

Better Coupling
Higher Performance

THE CONSTRUCTION AND THE OPERATION OF A TRANSFORMER

Step Up Knowledge, Power a Brighter Future

KEY IDEAS

- The construction of a transformer consists **basic parts of transformer**.
- The **operation** of a transformer is focus on the importance of the **core material**, the **primary winding** and **secondary winding** and **turn ratio**.

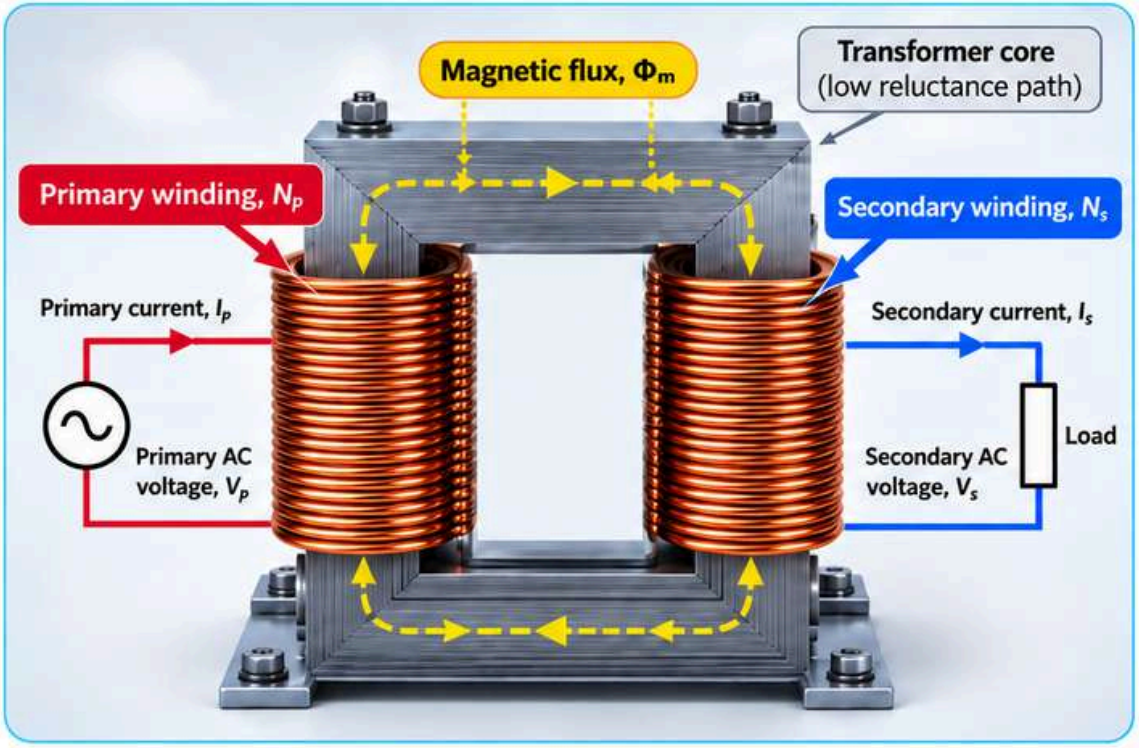

PARTS OF A BASIC TRANSFORMER

1. A transformer consists of **two windings** connected by a **magnetic core**.
2. The primary winding is connected to a **power supply** and the other winding is connected to **load**.
3. These coils are **insulated from each other**. The **main flux** is induced in the **primary winding** of the transformer.
4. This flux passes through the **low reluctance path** of the magnetic core and linked with the **secondary winding** of the transformer.

HOW IT WORKS?

Alternating current in the primary winding produces a magnetic flux in the core, which links with the secondary winding and induces a voltage in it.

Transforming Voltage, Connecting Possibilities

THE MAIN PARTS OF A TRANSFORMER

Transforming Knowledge into Brighter Futures

A transformer consists of a **magnetic core** and **windings**, which work together to transfer electrical energy from one circuit to another through electromagnetic induction.

1 Core material

- Pieces of magnetic material with a high magnetic permeability, used to guide magnetic fields in transformers.
- Magnetic cores serve as the pathway of the flux.
- A transformer core is a static device that transmits power from one source to another through electromagnetic induction.

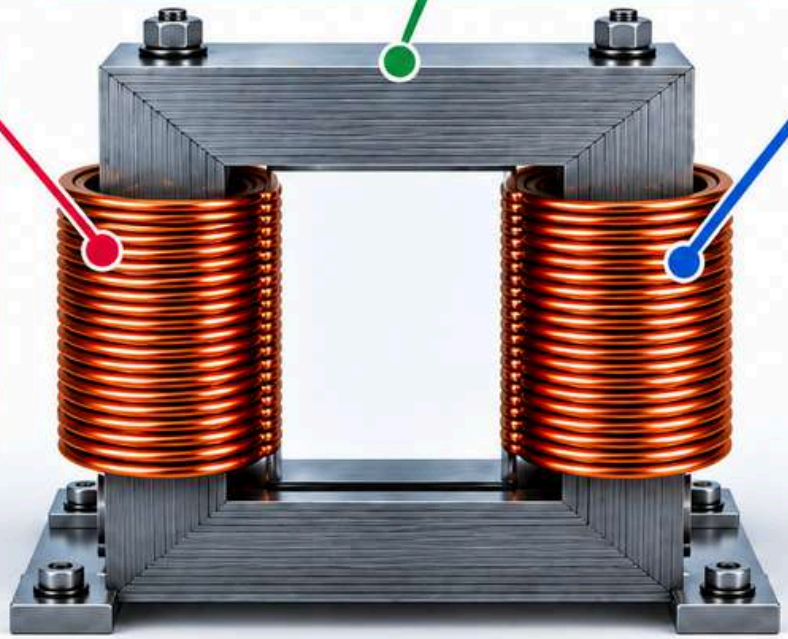

2 Primary winding

- The primary winding is to receive the energy from the AC source.
- It is usually connected to the supply voltage (input).
- When an alternating current flows through the primary winding, it produces a magnetic flux in the core.

3 Secondary winding

- The secondary winding is to receive energy from the primary winding and delivers it to the load.
- An alternating voltage is induced in the secondary winding due to the changing magnetic flux in the core.
- It is usually connected to the load (output).

KEY TAKEAWAY

The **core material** and **windings** work together to provide a **low-reluctance path** for magnetic flux, enabling efficient transfer of electrical energy.

Better Transformers Brighter Tomorrow

TURN RATIO

Small Change Big Difference

Transformers Make Power Work for a Brighter Tomorrow

KEY IDEAS

- Transformation ratio more commonly known as **turn ratio** is comparison between primary and secondary elements.
- Turn ratio is the ratio of turns of wire in the primary winding to the number of turns of wire in the secondary winding.

$$\textit{Turn ratio} = \frac{N_p}{N_s}$$

N_p : Number of turns on the primary winding

N_s : Number of turns on the secondary winding

STEP UP TRANSFORMER

Secondary winding has more turns than the primary winding ($N_s > N_p$).

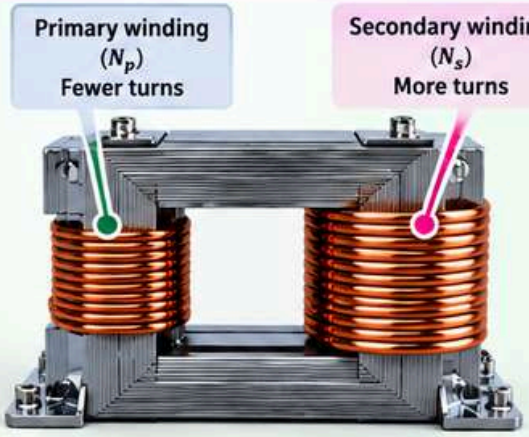

If $N_s > N_p$, the transformer is called **step up transformer.**

STEP DOWN TRANSFORMER

Primary winding has more turns than the secondary winding ($N_p > N_s$).

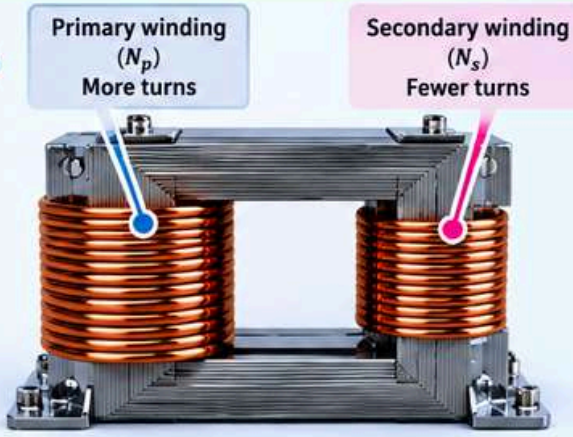

If $N_p > N_s$, the transformer is called **step down transformer.**

KEY TAKEAWAY

The **turn ratio** tells us how many times the voltage is increased or decreased based on the number of turns in the windings.

Different Turns Different Voltage Bigger Possibilities

EXAMPLE

EXAMPLE E3.1 | TRANSFORMER TURNS RATIO



Calculate the turns ratio of each transformer and state whether it is a step-up or step-down transformer.

(a) $N_p = 120$ turns, $N_s = 240$ turns

(b) $N_p = 25$ turns, $N_s = 7$ turns

$$\text{Turns ratio} = \frac{N_p}{N_s} = \frac{V_p}{V_s}$$

N_p: primary turns N_s: secondary turns

Voltage relation assumes an ideal transformer.

SOLUTION (a)

STEP 1 GIVEN

- Primary winding: $N_p = 120$ turns
- Secondary winding: $N_s = 240$ turns

STEP 2 CALCULATE

$$\frac{N_p}{N_s} = \frac{120}{240} = 0.50$$

Primary : secondary = 1 : 2

STEP 3 CLASSIFY

$N_s > N_p \rightarrow V_s > V_p$ **STEP-UP TRANSFORMER**

The secondary voltage is higher than the primary voltage.

SOLUTION (b)

STEP 1 GIVEN

- Primary winding: $N_p = 25$ turns
- Secondary winding: $N_s = 7$ turns

STEP 2 CALCULATE

$$\frac{N_p}{N_s} = \frac{25}{7} \approx 3.57$$

Primary : secondary = 25 : 7

STEP 3 CLASSIFY

$N_s < N_p \rightarrow V_s < V_p$ **STEP-DOWN TRANSFORMER**

The secondary voltage is lower than the primary voltage.

REMEMBER Using $\frac{N_p}{N_s}$: ratio < 1 → step-up; ratio > 1 → step-down.

THINK

A student states: “A step-up transformer increases both voltage and electrical power.” Do you agree? Explain your answer for an ideal transformer.

TRANSFORMER AS A DEVICE FOR INCREASING AND DECREASING VOLTAGE

Same Principles Brighter Possibilities



KEY IDEAS

- Transformers are commonly **used to convert AC voltage** from one level to another level.
- A step up transformer **boosts** the **voltage** from the primary side to a higher voltage level at the secondary side.
- A step down transformer **reduces** the primary voltage to a lower level.

TRANSFORMER

STEP-UP TRANSFORMER



Construction of step-up transformer

Turn ratio of a step-up transformer

The relationship between primary and secondary voltages and turn ratio

STEP-DOWN TRANSFORMER



Construction of step-down transformer

Turn ratio of a step-down transformer

The effect of a resistive load across the secondary winding

Transforming Knowledge Empowering Futures

The transformer allows us to increase or decrease AC voltage depending on the turn ratio, making it essential in power generation, transmission, distribution and electrical devices.

STEP-UP TRANSFORMER

Higher Voltage Brighter Possibilities

STEP UP FOR A BRIGHTER TOMORROW

CONSTRUCTION OF A STEP-UP TRANSFORMER

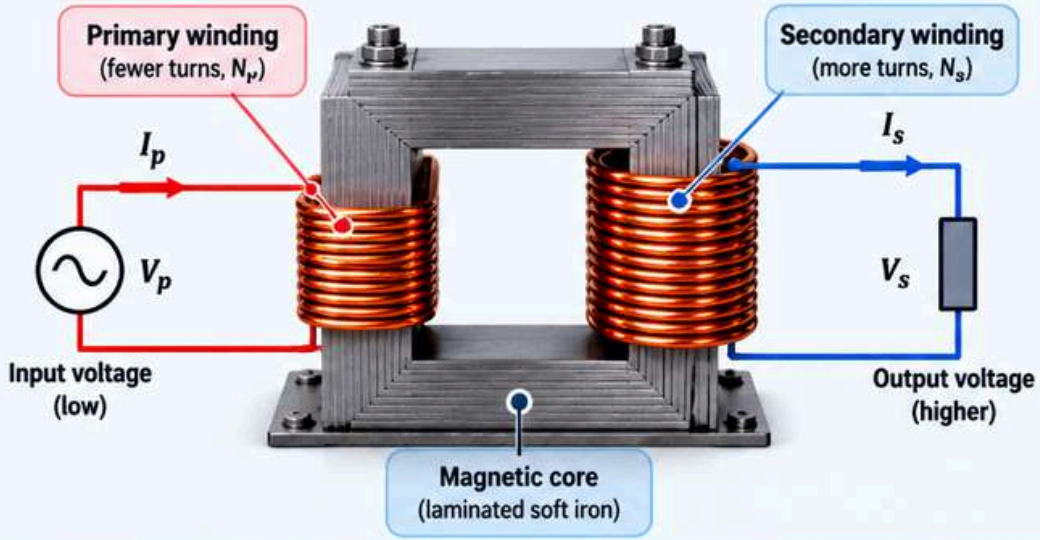

HOW A STEP-UP TRANSFORMER WORKS

1. Increases the output voltage, V_s.
2. Input voltage is low while the output voltage is high, $V_p < V_s$.
3. High voltage winding is the secondary winding, $N_s > N_p$.
4. Current is low on the secondary winding, $I_s < I_p$.

KEY POINT

A step-up transformer increases voltage by using more turns in the secondary winding than in the primary winding.

TURN RATIO OF A STEP-UP TRANSFORMER

For an ideal transformer:

$$\frac{V_p}{V_s} = \frac{N_p}{N_s}$$

- $\frac{V_p}{V_s}$ is called the **voltage ratio**.
- $\frac{N_p}{N_s}$ is called the **turns ratio**.
- $\frac{V_p}{V_s}$ and $\frac{N_p}{N_s}$ are also known as the **transformation ratio** of the transformer.
- If N_s is greater than N_p $(N_s > N_p)$ then V_s is greater than V_p $(V_s > V_p)$ and the device is termed a **step-up transformer**.

Remember!

- ✓ More turns in secondary → higher voltage
- ✓ $N_s > N_p \rightarrow V_s > V_p$
- ✓ $I_s < I_p$

Higher Voltage Greater Opportunities

THE RELATIONSHIP BETWEEN PRIMARY AND SECONDARY VOLTAGES AND THE TURN RATIO

Transformers Connect A Brighter World

1 **Induced e.m.f. in a coil of N turns**

$$E = -N\frac{d\phi}{dt} \text{ volts}$$

where $\frac{d\phi}{dt}$ is the rate of change of flux.

2 **In an ideal transformer,** the rate of change of flux is the same for both primary and secondary and thus

$$\frac{E_p}{N_p} = \frac{E_s}{N_s}$$

i.e. the induced e.m.f. per turn is constant.

3 **Assuming no losses, $E_p = V_p$ and $E_s = V_s$. Hence**

4 **Therefore,**

$$\frac{V_p}{N_p} = \frac{V_s}{N_s} \quad \textbf{OR} \quad \frac{V_p}{V_s} = \frac{N_p}{N_s}$$

Same Principles Brighter Possibilities

A TRANSFORMER MODEL

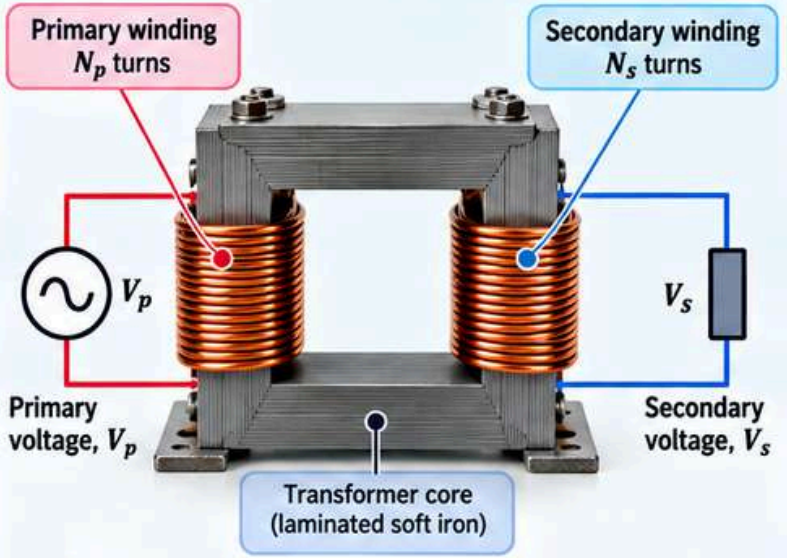

KEY FORMULA

The ratio of primary to secondary voltage is equal to the ratio of the number of turns in the primary to the secondary winding.

Knowledge Transforms Tomorrow

STEP-DOWN TRANSFORMER

Lower Voltage Safer Usage

POWER TODAY A BRIGHTER TOMORROW

CONSTRUCTION OF A STEP-DOWN TRANSFORMER

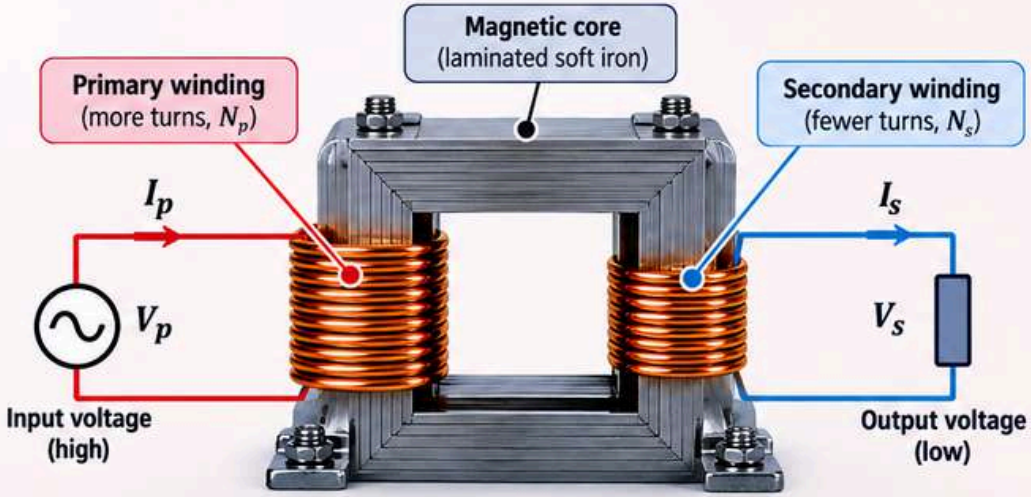

HOW A STEP-DOWN TRANSFORMER WORKS

1. Reduces the output voltage, V_s.
2. Input voltage is high while the output voltage is low, $V_p > V_s$.
3. High voltage winding is the primary winding, $N_p > N_s$.
4. Current is high on the secondary winding, $I_s > I_p$.

KEY POINT A **step-down transformer** reduces voltage by using fewer turns in the secondary winding than in the primary winding.

TURN RATIO OF A STEP-DOWN TRANSFORMER

For an ideal transformer:

$$\frac{V_p}{V_s} = \frac{N_p}{N_s}$$

- $\frac{V_p}{V_s}$ is called the **voltage ratio.**
- $\frac{N_p}{V_s}$ is called the **turns ratio.**
- $\frac{V_p}{V_s}$ and $\frac{N_p}{N_s}$ are also known as the **transformation ratio** of the transformer.
- If N_s is less than N_p $(N_s < N_p)$ then V_s is less than V_p $(V_s < V_p)$ and the device is termed a **step-down transformer.**

Remember!

- ✓ Fewer turns in secondary → lower voltage
- ✓ $N_s < N_p \rightarrow V_s < V_p$
- ✓ $I_s > I_p$

Lower Voltage Wider Applications

Transformers make electrical energy more usable for our daily life.

Same Principles Brighter Possibilities

THE EFFECT OF A RESISTIVE LOAD ACROSS THE SECONDARY WINDING

Load Today Power for Tomorrow

TRANSFORMERS POWER PEOPLE PROGRESS

1 LOAD CONNECTED TO THE SECONDARY WINDING

- When a load is connected across the secondary winding, a current I_s flows.
- In an ideal transformer, losses are neglected and the transformer is considered to be 100% efficient.

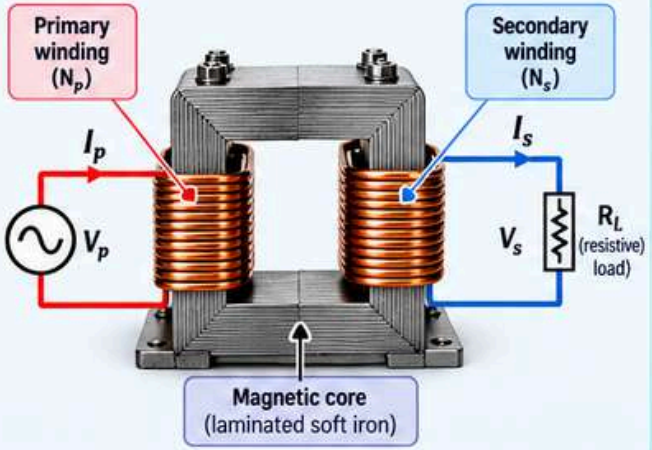

2 INPUT POWER = OUTPUT POWER

For an ideal transformer (100% efficiency),

Input power = Output power

$$P_{in} = P_{out}$$

$$V_p I_p = V_s I_s$$

Key Point

In an ideal transformer, no power is lost. The input power equals the output power.

3 RELATE VOLTAGE AND CURRENT

From the power equation $V_p I_p = V_s I_s$, rearrange to obtain the relationship between primary and secondary voltages and currents.

$$\frac{V_p}{V_s} = \frac{I_s}{I_p}$$

Key Point

- Higher voltage → Lower current
- Lower voltage → Higher current

4 COMBINE WITH THE TURN RATIO

From the previous topic, the voltage and turn ratio are related by

$$\frac{V_p}{V_s} = \frac{N_p}{N_s}$$

Combining this with $\frac{V_p}{V_s} = \frac{I_s}{I_p}$ gives

$$\frac{V_p}{V_s} = \frac{N_p}{N_s} = \frac{I_s}{I_p}$$

Key Point

The voltage ratio equals the turns ratio and also the inverse of the current ratio.

FINAL FORMULA (REMEMBER THIS!)

$$\frac{V_p}{V_s} = \frac{N_p}{N_s} = \frac{I_s}{I_p}$$

Memory Tip

VOLTAGE ↔ TURNS ↔ CURRENT

$$V_p : N_p : I_p \leftrightarrow V_s : N_s : I_s$$

Same Principles Brighter Futures

- A resistive load on the secondary winding draws a current.
- In an ideal transformer, input power equals output power.
- The voltage ratio equals the turns ratio and also the inverse of the current ratio.

Transformers Make Energy More Useful

EXAMPLE

EXAMPLE E3.2 | CALCULATING SECONDARY VOLTAGE



A transformer has 400 primary turns and 2000 secondary turns. If the primary voltage is 230 V, determine the secondary voltage, assuming an ideal transformer.

SOLUTION

STEP 1 IDENTIFY THE GIVEN VALUES

- Primary turns: $N_p = 400$
- Secondary turns: $N_s = 2000$
- Primary voltage: $V_p = 230\ V$
- Find: $V_s = ?$

STEP 2 WRITE THE FORMULA

$$\frac{V_p}{V_s} = \frac{N_p}{N_s}$$

For an ideal transformer, the voltage ratio equals the turns ratio.

STEP 3 REARRANGE FOR V_s

Make the secondary voltage the subject.

$$V_p\ N_s = V_s\ N_p$$

$$V_s = \frac{V_p \times N_s}{N_p}$$

STEP 4 SUBSTITUTE AND CALCULATE

$$V_s = \frac{230 \times 2000}{400}$$

$$V_s = 1150\ \text{V} = 1.15\ \text{kV}$$

The secondary voltage is five times the primary voltage.

CHECK YOUR ANSWER

$\frac{N_s}{N_p} = 5 \rightarrow \frac{V_s}{V_p} = 5 \rightarrow$ STEP-UP TRANSFORMER

THINK

Without calculating, would you expect the secondary voltage to be higher or lower than 230 V? Explain using the number of turns in each winding.

EXAMPLE

EXAMPLE E3.3 | CALCULATING OUTPUT VOLTAGE



An ideal transformer with a turns ratio of 3:8 is fed from a 240 V supply. Determine its output voltage.

SOLUTION

STEP 1 IDENTIFY THE GIVEN VALUES

- Primary : secondary turns $= 3 : 8$

$$\frac{N_p}{N_s} = \frac{3}{8}$$

- Primary voltage: $V_p = 240\ V$
- Find: $V_s = ?$

STEP 2 WRITE THE FORMULA

$$\frac{V_p}{V_s} = \frac{N_p}{N_s}$$

For an ideal transformer, the voltage ratio equals the turns ratio.

STEP 3 REARRANGE FOR V_s

Make the output voltage the subject.

$$V_s = V_p \times \frac{N_s}{N_p}$$

$$\frac{N_s}{N_p} = \frac{8}{3}$$

STEP 4 SUBSTITUTE AND CALCULATE

$$V_s = 240 \times \frac{8}{3}$$

$$V_s = 640\ \text{V}$$

The output voltage is higher than the supply voltage.

CHECK YOUR ANSWER | $\frac{640}{240} = \frac{8}{3}$ **STEP-UP TRANSFORMER**

THINK

What does the turns ratio 3:8 mean? Does it necessarily mean that the windings contain exactly 3 and 8 turns?

EXAMPLE

EXAMPLE E3.4 | SECONDARY VOLTAGE AND CURRENT



An ideal transformer has a primary-to-secondary turns ratio of 1:7. The primary current is 5 A when supplied at 230 V. Calculate the secondary voltage and current.

SOLUTION

STEP 1 IDENTIFY THE GIVEN VALUES

- Turns ratio: $\frac{N_p}{N_s} = \frac{1}{7}$
- Primary voltage: $V_p = 230\ V$
- Primary current: $I_p = 5\ A$
- Find: V_s and I_s

STEP 2 WRITE THE FORMULA

$$\frac{V_p}{V_s} = \frac{N_p}{N_s} = \frac{I_s}{I_p}$$

Voltage follows the turns ratio; current follows its inverse.

STEP 3 REARRANGE THE FORMULAS

- Voltage: $V_s = V_p \times \frac{N_s}{N_p}$
- Current: $I_s = I_p \times \frac{N_p}{N_s}$

STEP 4 SUBSTITUTE AND CALCULATE

- Secondary voltage: $V_s = 230 \times 7 = 1610\ V$

  $V_s = 1.61\ kV$
- Secondary current: $I_s = 5 \times \frac{1}{7} \approx 0.714\ A$

  $I_s \approx 0.714\ A$

CHECK YOUR ANSWER

$V_p I_p = V_s I_s = 1150\ W$

Higher voltage → lower current

THINK

Compare VpIp and VsIs, using the unrounded secondary current. What does this reveal about energy transfer in an ideal transformer?

EXAMPLE

EXAMPLE E3.5 | TURNS RATIO AND SUPPLY CURRENT



An ideal transformer connected to a 240 V mains supply powers a 15 V, 120 W lamp.
Calculate the transformer turns ratio and the current taken from the supply.

SOLUTION

STEP 1 IDENTIFY THE GIVEN VALUES

- Primary voltage: $V_p = 240\ \text{V}$
- Secondary voltage: $V_s = 15\ \text{V}$
- Lamp power: $P_{out} = 120\ \text{W}$
- Find: $\frac{N_p}{N_s}$ and I_p

STEP 2 WRITE THE FORMULA

$$P_{out} = V_s I_s$$

$$\frac{V_p}{V_s} = \frac{N_p}{N_s} = \frac{I_s}{I_p}$$

Ideal transformer: input power = output power.

STEP 3 REARRANGE THE FORMULAS

$$I_s = \frac{P_{out}}{V_s}$$

$$\frac{N_p}{N_s} = \frac{V_p}{V_s}$$

$$I_p = I_s \times \frac{N_s}{N_p}$$

STEP 4 SUBSTITUTE AND CALCULATE

$$I_s = \frac{120}{15} = 8\ \text{A}$$

$$\frac{N_p}{N_s} = \frac{240}{15} = 16$$

Turns ratio = 16 : 1

$$I_p = 8 \times \frac{1}{16} = 0.50\ \text{A}$$

Supply current = 0.50 A

CHECK YOUR ANSWER

$240 \times 0.50 = 15 \times 8 = 120\ \text{W}$

STEP-DOWN TRANSFORMER

THINK

What do the lamp ratings 15 V and 120 W mean? Which rating determines the required secondary voltage?

THREE-PHASE TRANSFORMER



TRANSFORMERS
POWER
PEOPLE
PROGRESS

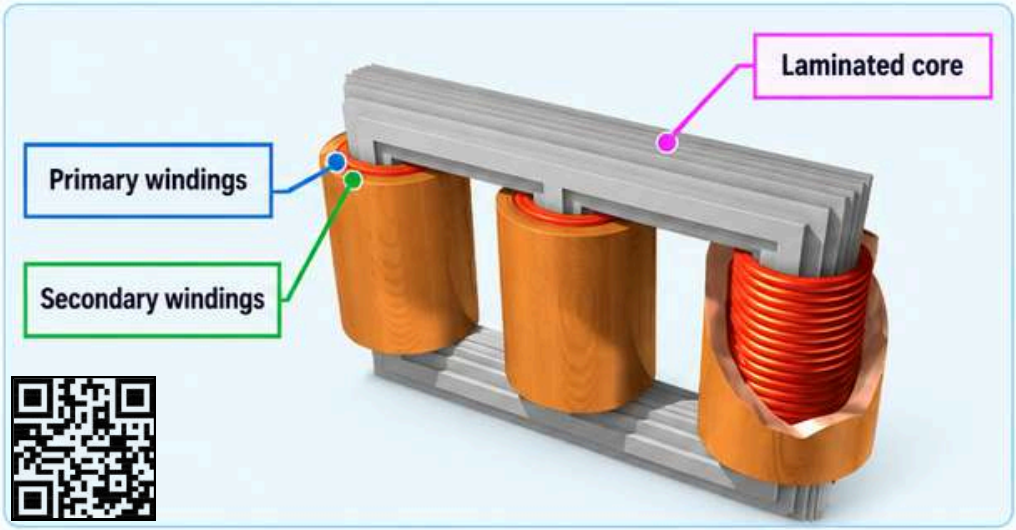

KEY POINTS

- Three-phase transformers are the **backbone of electrical power distribution**, whether delta or star connected windings.
- **Double-wound transformers** are mainly used in power transmission and are usually of the core type.
- They basically consist of **three pairs of single-phase windings** mounted on one core.
- This gives a **considerable saving** in the amount of iron used.
- The primary and secondary windings in the figure are wound on top of each other in the form of **concentric cylinders**.



Three-phase transformer used in a substation

REAL-WORLD APPLICATION

- Three-phase transformers are widely used by TNB in substations for power transmission and distribution.
- Step-up transformers increase the voltage for long-distance transmission.
- Step-down transformers reduce the voltage for distribution to consumers.
- Designed for high efficiency, reliability and continuous operation.
- Essential for a stable and reliable electricity supply to homes, industries and businesses.

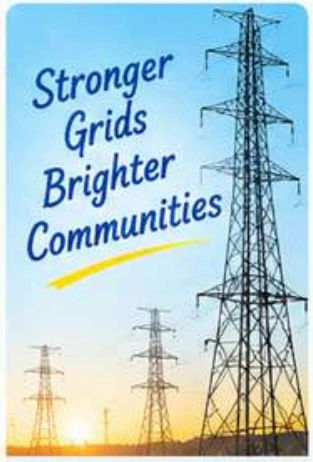

Sustainable
Energy
Better Tomorrow

Watch Video **How 3 Phase Transformers Work – why we need them**

THREE-PHASE TRANSFORMER CONSTRUCTION

Same Core Stronger Together

1 CONSTRUCTION OF A THREE-PHASE TRANSFORMER

Three-phase transformer consists of three sets of windings where the primary and secondary windings for each respective phase are wound on the same core limbs.

2 SCHEMATIC DIAGRAM

The schematic diagram of a three-phase transformer is shown in the figure.

3 SEPARATE SINGLE-PHASE TRANSFORMERS

Separate single-phase transformers can be used and externally interconnected to yield the same results as a three-phase unit.



Three separate single-phase transformers

Externally interconnected

Schematic diagram of a step-down three-phase transformer

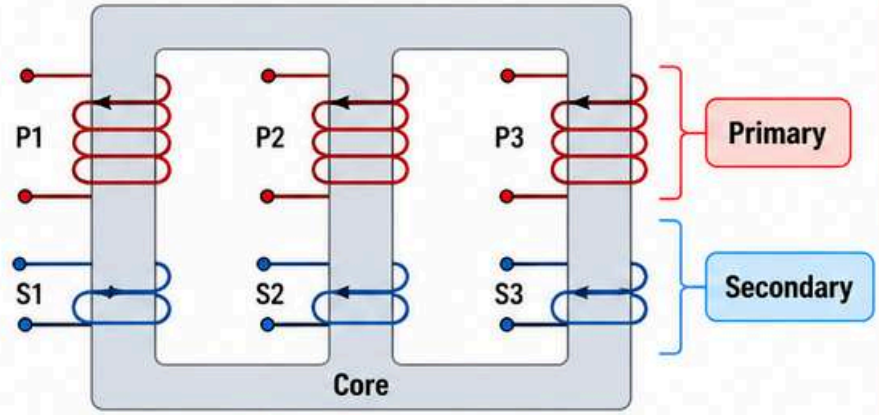



Equivalent three-phase transformer

SAME RESULT

- Three separate single-phase transformers connected together provide the same result as a three-phase unit.
- More flexible for installation and maintenance.
- Commonly used in certain applications when three-phase units are not available.

THREE-PHASE TRANSFORMER CONFIGURATION

Different Connections for Different Applications



KEY POINTS

1. A transformer cannot act as a changing device and change single phase into three-phase or vice versa.
2. **Three Phase Transformer Configuration;** the transformer connections compatible with three-phase supplies.
3. The windings may be with the primary delta-connected and the secondary star-connected, or star-delta, star-star or delta-delta, depending on its use.
4. Delta and star are two types of transformer windings configurations.

STAR (Y) CONNECTION

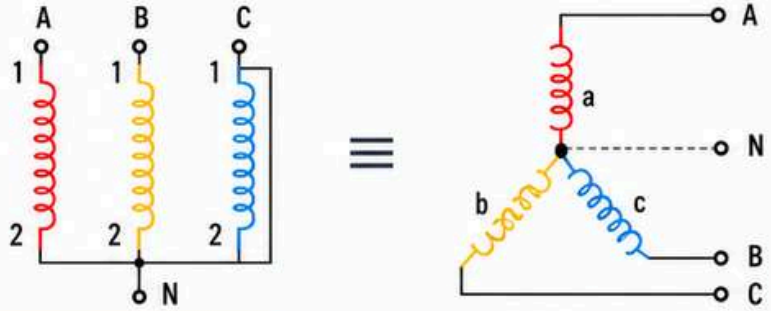

Star (Y) connection

- In a star connected winding, the winding is arranged such that each of the phase windings of a three-phase transformer is connected to a common point (neutral point).
- Each phase winding consists of two ends, with one end joined at the neutral point and the other end connected to the line terminal (A, B or C).

DELTA (Δ) CONNECTION

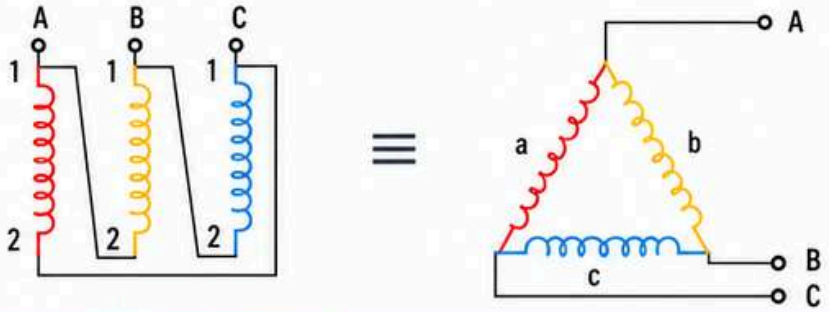

Delta (Δ) connection

- In a delta configuration, the winding connection is arranged such that the phase windings of a three-phase transformer are connected in series to form a closed circuit.
- Each phase winding is connected end-to-end with the next winding, forming a triangle (delta), with the line terminals taken from the junctions (A, B and C).

Transformer Configurations for Reliable and Efficient Power Distribution

SUSTAINABLE ENERGY
BRIGHTER TOMORROW

THREE-PHASE TRANSFORMER CONNECTIONS

Flexible Connections for Reliable Power

1. The primary and secondary windings of a transformer can be connected in different configuration as shown in the diagram to meet practically any requirement.
2. The combinations of the three windings may be with the primary delta-connected and the secondary star-connected, or star-delta, star-star or delta-delta, depending on the transformers use.

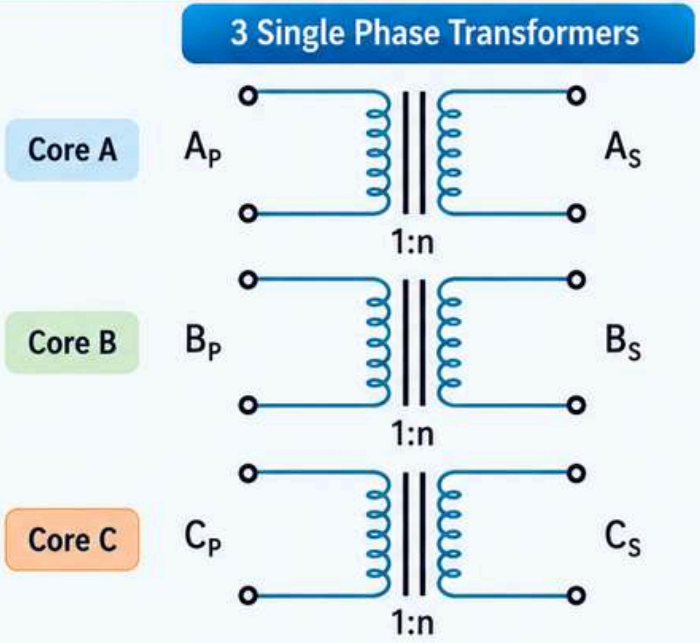

Primary Configuration	Secondary Configuration
Delta (Mesh) △	Delta (Mesh) △
Delta (Mesh) △	Star (Wye) Y
Star (Wye) Y	Delta (Mesh) △
Star (Wye) Y	Star (Wye) Y

Three single phase transformer connection

Multiple Configurations for Versatile Power Distribution

RELIABLE ENERGY
BRIGHTER TOMORROW

THREE-PHASE TRANSFORMER WINDING IDENTIFICATION

Correct Identification for Proper Connection



KEY POINTS

1. There are four different ways in which three single-phase transformers may be connected together between their primary and secondary three-phase circuits.
2. These four standard configurations are given as: Delta-Delta (Dd), Star-Star (Yy), Star-Delta (Yd), and Delta-Star (Dy).
3. In the table, the transformer winding connection can be identifying for primary winding with capital letter and secondary winding with small letter.

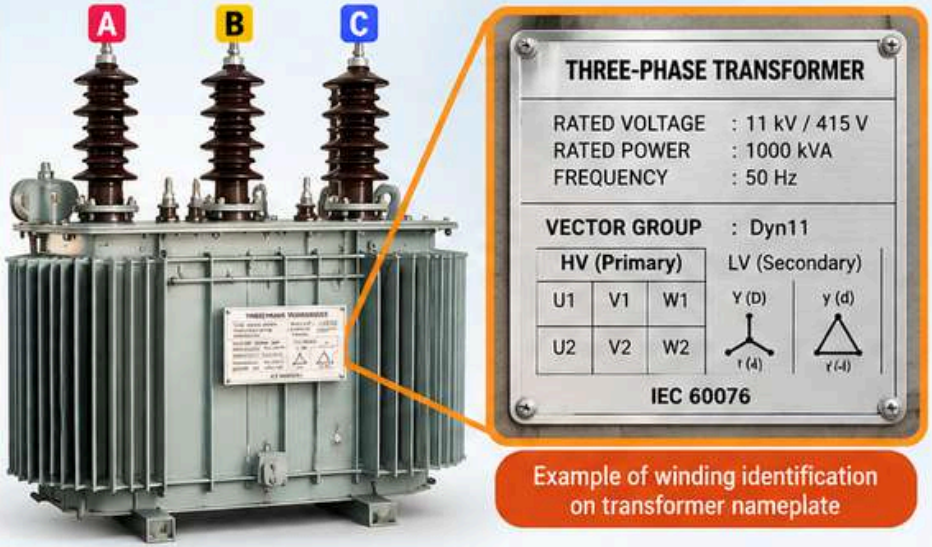

Example of winding identification on transformer nameplate

Transformer winding identification

Connection	Primary winding	Secondary winding
Delta	D	d
Star	Y	y

Delta (D or d)



Windings connected in delta form a closed loop.

Star (Y or y)



Windings connected to a common point (neutral).

Identify Correct Winding Configuration for Reliable Power Systems

SAME CORE BRIGHTER FUTURE

THREE-PHASE TRANSFORMER CONNECTION CONFIGURATIONS

Star-Star connection (Yy)

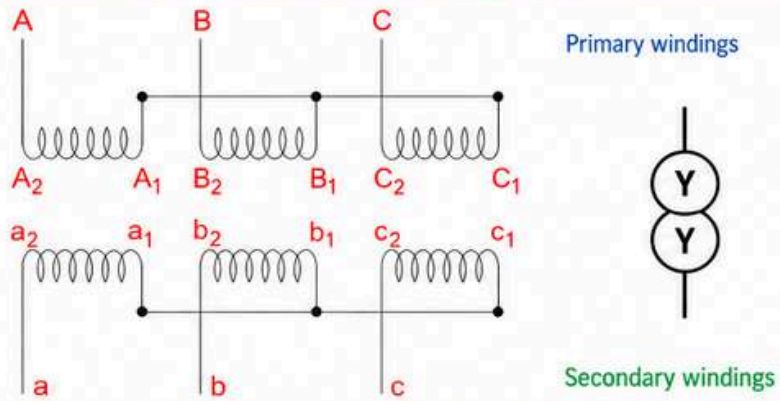

Delta-Delta connection (Dd)

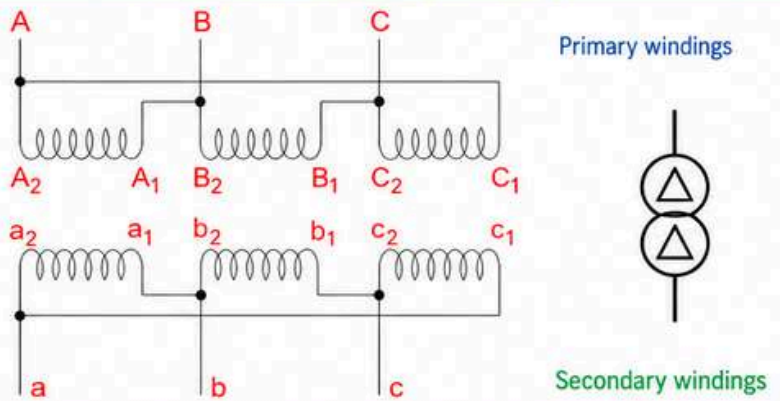

Star-Delta connection (Yd)

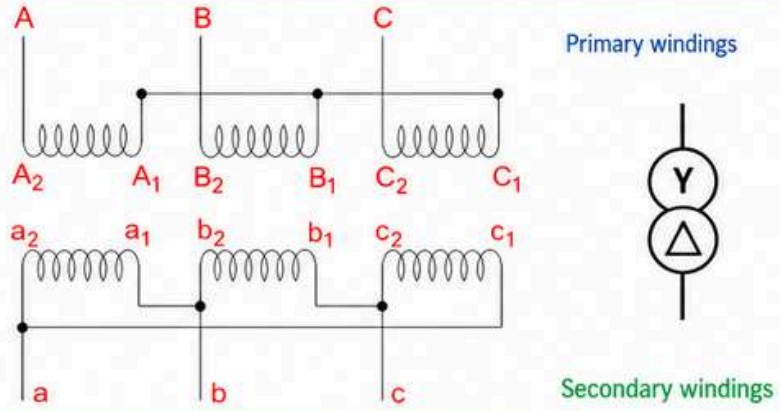

Delta-Star connection (Dy)

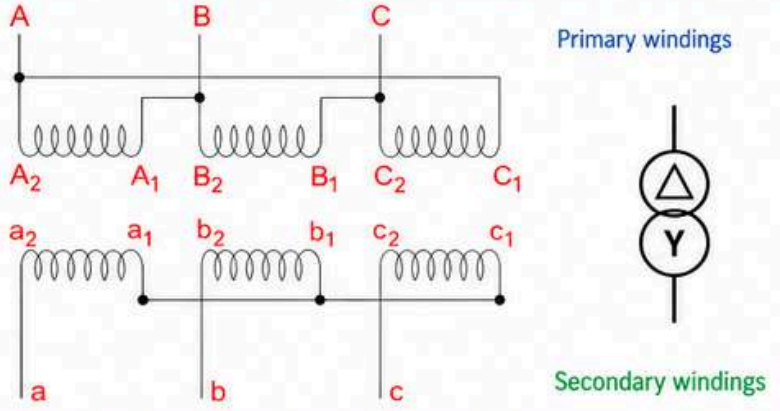

MEMORY KEY:

First letter = PRIMARY connection | Second letter = SECONDARY connection

Y = Star | Δ = Delta

To draw correctly:

1. Identify the three phase windings
2. Connect the winding ends
3. Label terminals A/B/C and a/b/c
4. Match the Y/Δ symbol.

EXAMPLE

EXAMPLE E3.6 | THREE-PHASE TRANSFORMER

THE EXAMPLE

A three-phase transformer has 500 primary turns and 50 secondary turns per phase. The supply line voltage is 2.4 kV. Find the secondary line voltage on no-load when the windings are connected:

(a) Star–delta (Yd)
(b) Delta–star (Dy)

GIVEN DATA $N_p = 500$ turns/phase | $N_s = 50$ turns/phase | $V_{L,p} = 2.4\,\text{kV}$

SOLUTION (a): YOUR FOUR-STEP GUIDE | Star primary → Delta secondary

INTERACTIVE PAGE

1 STEP 1
DRAW AND LABEL

Draw the star–delta winding connections. Label terminals, turns and line/phase voltages.

2 STEP 2
PRIMARY PHASE VOLTAGE

Use the star relationship to find $V_{ph,p}$ from the supply line voltage.

3 STEP 3
SECONDARY PHASE VOLTAGE

Apply the winding turns ratio to find $V_{ph,s}$.

4 STEP 4
SECONDARY LINE VOLTAGE

Use the delta relationship to find $V_{L,s}$.

✓ 2 | Each solution page highlights its current step in yellow; the other steps remain blue.

TRY FIRST! CLICK TO CHECK YOUR ANSWER.

EXAMPLE E3.6 | SOLUTION(a): STAR-DELTA (Yd)

1 Draw and label | 2 Primary phase voltage | 3 Secondary phase voltage | 4 Secondary line voltage

STEP 1 — DRAW AND LABEL THE CONNECTION

Draw three primary windings in star and three secondary windings in delta. Label the known values and the voltages to be found.

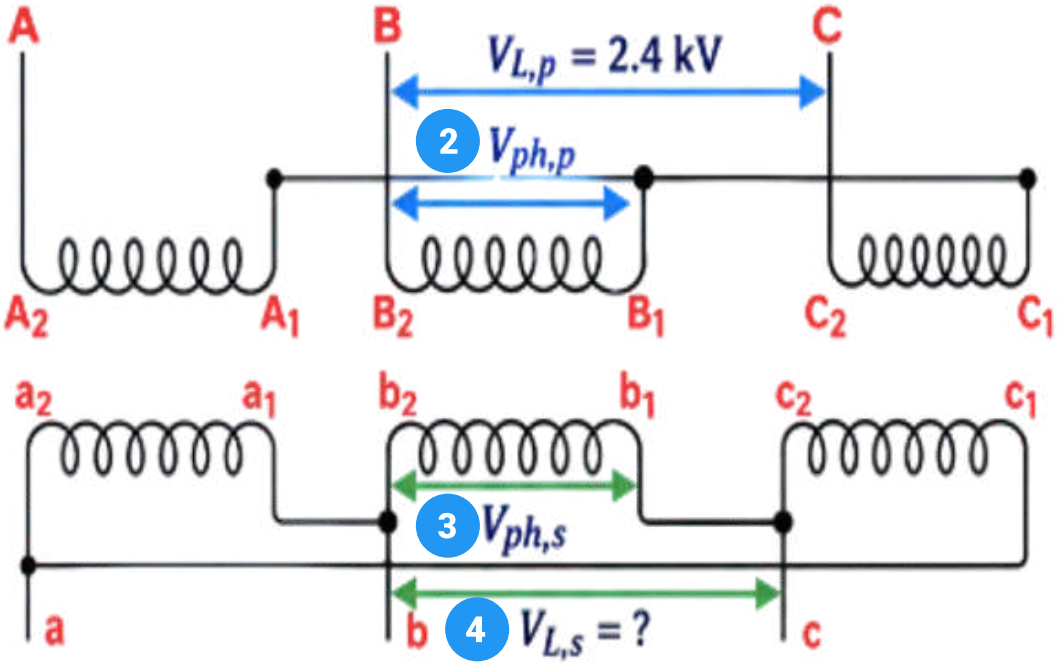



Primary:
$N_p = 500$
turns/phase

Secondary:
$N_s = 50$
turns/phase

STAR PRIMARY

$$V_{L,p} = \sqrt{3}\, V_{ph,p}$$

DELTA SECONDARY

$$V_{L,s} = V_{ph,s}$$

Click a step number to view its solution.

EXAMPLE E3.6 | SOLUTION(a): STAR-DELTA (Yd)

1 Draw and label | **2 Primary phase voltage** | 3 Secondary phase voltage | 4 Secondary line voltage

STEP 2 — FIND THE PRIMARY PHASE VOLTAGE

Primary: **STAR (Y)** | $V_{L,p} = 2.4\ \text{kV} = 2400\ \text{V}$ | Find $V_{ph,p}$

ACTION	CALCULATION	EXPLANATION
FORMULA	$V_{L,p} = \sqrt{3}\, V_{ph,p}$	For star, line voltage is $\sqrt{3}$ times phase voltage.
REARRANGE	$V_{ph,p} = \dfrac{V_{L,p}}{\sqrt{3}}$	Divide both sides by $\sqrt{3}$ to isolate the phase voltage.
SUBSTITUTE	$V_{ph,p} = \dfrac{2400}{\sqrt{3}}$	Use 2400 V as the primary line voltage.

ANSWER | $V_{ph,p} = 1385.64\ \text{V} = 1.386\ \text{kV}$

This is the voltage across one primary winding. Use the unrounded value in **STEP 3**.

EXAMPLE E3.6 | SOLUTION(a): STAR-DELTA (Yd)

1 Draw and label | 2 Primary phase voltage | 3 Secondary phase voltage | 4 Secondary line voltage

STEP 3 — FIND THE SECONDARY PHASE VOLTAGE

From **STEP 2:** $V_{ph,p} = 2400/\sqrt{3}$ V | $N_p = 500,\ N_s = 50$ | Find $V_{ph,s}$

ACTION	CALCULATION	EXPLANATION
FORMULA	$\frac{V_{ph,p}}{V_{ph,s}} = \frac{N_p}{N_s}$	The winding turns ratio relates primary and secondary phase voltages.
REARRANGE	$V_{ph,s} = V_{ph,p} \times \frac{N_s}{N_p}$	Multiply the primary phase voltage by the secondary-to-primary turns ratio.
SUBSTITUTE	$V_{ph,s} = \frac{2400}{\sqrt{3}} \times \frac{50}{500}$	Use the unrounded primary phase voltage and the given turns.

ANSWER | $V_{ph,s} = 138.56$ V (rounded to 2 decimal places)

This is the voltage across one secondary winding. STEP 4 converts it to secondary line voltage.

EXAMPLE E3.6 | SOLUTION(a): STAR-DELTA (Yd)

1 Draw and label | 2 Primary phase voltage | 3 Secondary phase voltage | 4 Secondary line voltage

STEP 4 — FIND THE SECONDARY LINE VOLTAGE

Secondary: **DELTA (Δ)** | From STEP 3: $V_{ph,s} = 138.56\ \text{V}$ | Find $V_{L,s}$

ACTION	CALCULATION	EXPLANATION
FORMULA	$V_{L,s} = V_{ph,s}$	In delta, line voltage equals phase voltage.
SUBSTITUTE	$V_{L,s} = 138.56\ \text{V}$	Use the secondary phase voltage obtained in **STEP 3.**
ROUND	$V_{L,s} = 139\ \text{V}$	Round to the nearest volt.

ANSWER | $V_{L,s} = 139\ \text{V}$ (Secondary line voltage on no-load)

The delta secondary has the same line and phase voltage.

EXAMPLE

EXAMPLE E3.6 | THREE-PHASE TRANSFORMER

THE EXAMPLE

A three-phase transformer has 500 primary turns and 50 secondary turns per phase. The supply line voltage is 2.4 kV. Find the secondary line voltage on no-load when the windings are connected:

(a) Star–delta (Yd)
(b) Delta–star (Dy)

GIVEN DATA $N_p = 500$ turns/phase | $N_s = 50$ turns/phase | $V_{L,p} = 2.4\,\text{kV}$

SOLUTION (b): YOUR FOUR-STEP GUIDE | Delta primary → Star secondary

INTERACTIVE PAGE

1 STEP 1
DRAW AND LABEL

Draw the delta–star winding connections. Label terminals, turns and line/phase voltages.

2 STEP 2
PRIMARY PHASE VOLTAGE

Use the delta relationship to find $V_{ph,p}$ from the supply line voltage.

3 STEP 3
SECONDARY PHASE VOLTAGE

Apply the winding turns ratio to find $V_{ph,s}$.

4 STEP 4
SECONDARY LINE VOLTAGE

Use the star relationship to find $V_{L,s}$.

✓ 2 | Each solution page highlights its current step in yellow; the other steps remain blue.

TRY FIRST! CLICK TO CHECK YOUR ANSWER.

EXAMPLE E3.6 | SOLUTION(b): DELTA-STAR (Dy)

1 Draw and label | 2 Primary phase voltage | 3 Secondary phase voltage | 4 Secondary line voltage

STEP 1 — DRAW AND LABEL THE CONNECTION

Draw three primary windings in delta and three secondary windings in star. Label the known values and the voltages to be found.

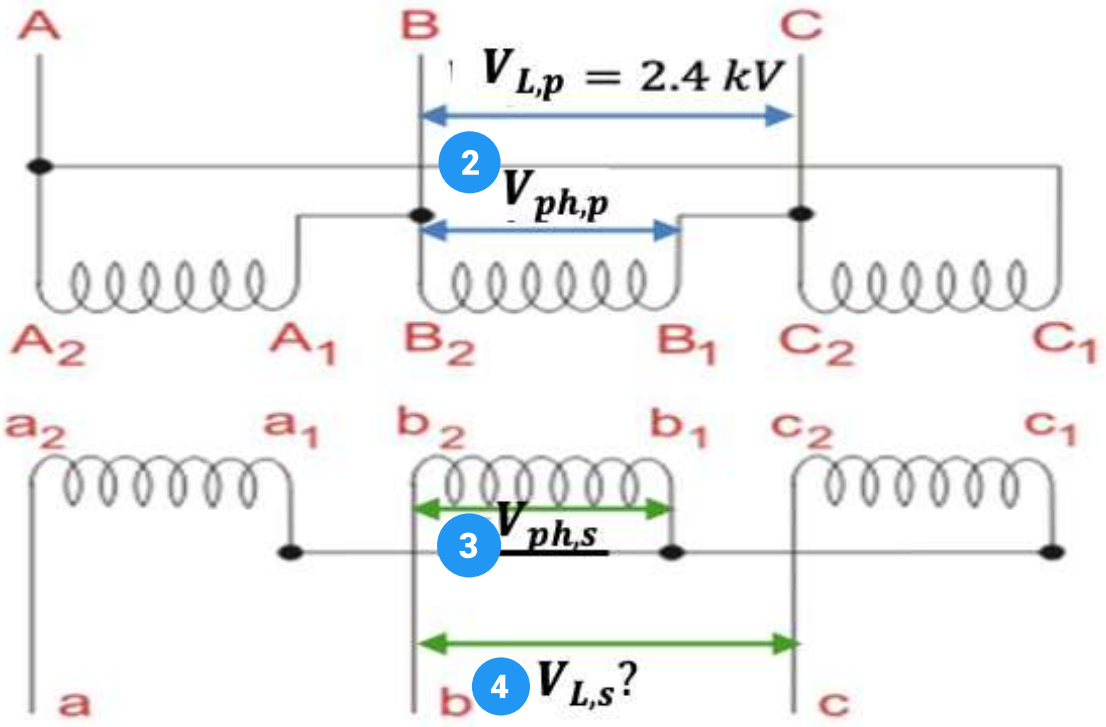

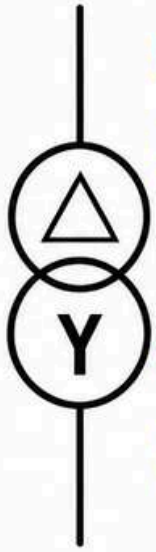

Primary:
$N_p = 500$
turns/phase

Secondary:
$N_s = 50$
turns/phase

DELTA PRIMARY

$$V_{L,p} = V_{ph,p}$$
$$I_{L,p} = \sqrt{3}\, I_{ph,p}$$

STAR SECONDARY

$$V_{L,s} = \sqrt{3}\, V_{ph,s}$$
$$I_{L,s} = I_{ph,s}$$

Click a step number to view its solution.

EXAMPLE E3.6 | SOLUTION(b): DELTA–STAR (Dy)

1 Draw and label | 2 Primary phase voltage | 3 Secondary phase voltage | 4 Secondary line voltage

STEP 2 — FIND THE PRIMARY PHASE VOLTAGE

Primary: DELTA (Δ) | $V_{L,p} = 2.4\ \text{kV} = 2400\ \text{V}$ | Find $V_{ph,p}$.

ACTION	CALCULATION	EXPLANATION
FORMULA	$V_{L,p} = V_{ph,p}$	In delta, line voltage equals phase voltage.
REARRANGE	$V_{ph,p} = V_{L,p}$	The voltage across each primary winding is the supply line voltage.
SUBSTITUTE	$V_{ph,p} = 2.4\ \text{kV} = 2400\ \text{V}$	Use the given primary line voltage directly.

ANSWER | $V_{ph,p} = 2400\ \text{V} = 2.4\ \text{kV}$

No $\sqrt{3}$ conversion is needed for the delta primary. Use this phase voltage in STEP 3.

EXAMPLE E3.6 | SOLUTION(b): DELTA–STAR (Dy)

1 Draw and label | 2 Primary phase voltage | 3 Secondary phase voltage | 4 Secondary line voltage

STEP 3 — FIND THE SECONDARY PHASE VOLTAGE

From STEP 2: $V_{ph,p} = 2400\ \text{V}$ | $N_p = 500,\ N_s = 50$ | Find $V_{ph,s}$

ACTION	CALCULATION	EXPLANATION
FORMULA	$\frac{V_{ph,p}}{V_{ph,s}} = \frac{N_p}{N_s}$	The winding turns ratio relates primary and secondary phase voltages.
REARRANGE	$V_{ph,s} = V_{ph,p} \times \frac{N_s}{N_p}$	Multiply the primary phase voltage by the secondary-to-primary turns ratio.
SUBSTITUTE	$V_{ph,s} = 2400 \times \frac{50}{500} = 240\ \text{V}$	Use the primary phase voltage of 2400 V and the given turns.

ANSWER | $V_{ph,s} = 240\ \text{V}$

This is the voltage across one secondary winding. STEP 4 converts it to secondary line voltage.

EXAMPLE E3.6 | SOLUTION(b): DELTA-STAR (Dy)

1 Draw and label | 2 Primary phase voltage | 3 Secondary phase voltage | 4 Secondary line voltage

STEP 4 — FIND THE SECONDARY LINE VOLTAGE

Secondary: STAR (Y) | From STEP 3: $V_{ph,s} = 240\ \text{V}$ | Find $V_{L,s}$

ACTION	CALCULATION	EXPLANATION
FORMULA	$V_{L,s} = \sqrt{3} V_{ph,s}$	In star, line voltage is $\sqrt{3}$ times phase voltage.
SUBSTITUTE	$V_{L,s} = \sqrt{3} \times 240$	Use the secondary phase voltage obtained in **STEP 3.**
CALCULATE	$V_{L,s} = 415.69\ \text{V}$	Evaluate and round to two decimal places.

ANSWER | $V_{L,s} = 415.69\ \text{V}$ (Secondary line voltage on no-load)

The star secondary line voltage is $\sqrt{3}$ times its phase voltage.

EXAMPLE

EXAMPLE E3.7 | THREE-PHASE TRANSFORMER

THE EXAMPLE

The primary winding of a delta–star (Dy) connected 50 VA transformer is supplied with a 100 V, 50 Hz three-phase supply. If the transformer has 500 turns on the primary and 100 turns on the secondary winding, calculate the secondary phase and line voltages and currents.

GIVEN DATA $S = 50$ VA (three-phase total) | $V_{L,p} = 100\ V$ | $f = 50$ Hz | $N_p = 500,\ N_s = 100$

Assume a balanced ideal transformer; turns are pre per phase.

YOUR SEVEN-STEP GUIDE | Delta primary → Star secondary

INTERACTIVE PAGE

1 STEP 1
DRAW AND LABEL

Draw the Dy connection and label the given values and unknowns.

2 STEP 2
PRIMARY PHASE VOLTAGE

Use the delta relationship to find $V_{ph,p}$.

3 STEP 3
SECONDARY PHASE VOLTAGE

Apply the turns ratio to find $V_{ph,s}$.

4 STEP 4
SECONDARY LINE VOLTAGE

Use the star relationship to find $V_{L,s}$.

5 STEP 5
PRIMARY PHASE CURRENT

Use $S = 3\,V_{ph,p}I_{ph,p}$ to find $I_{ph,p}$.

6 STEP 6
SECONDARY PHASE CURRENT

Apply the inverse turns ratio to find $I_{ph,s}$.

7 STEP 7
SECONDARY LINE CURRENT

Use the star relationship to find $I_{L,s}$.

Click a step number to view its solution.

EXAMPLE E3.7 | SOLUTION: DELTA–STAR (Dy)

1 Draw and label | 2 Primary phase voltage | 3 Secondary phase voltage | 4 Secondary line voltage | 5 Primary phase current | 6 Secondary phase current | 7 Secondary line current

STEP 1 — DRAW AND LABEL THE CONNECTION

Draw the delta primary and star secondary. Label the known values and the quantities to be found.

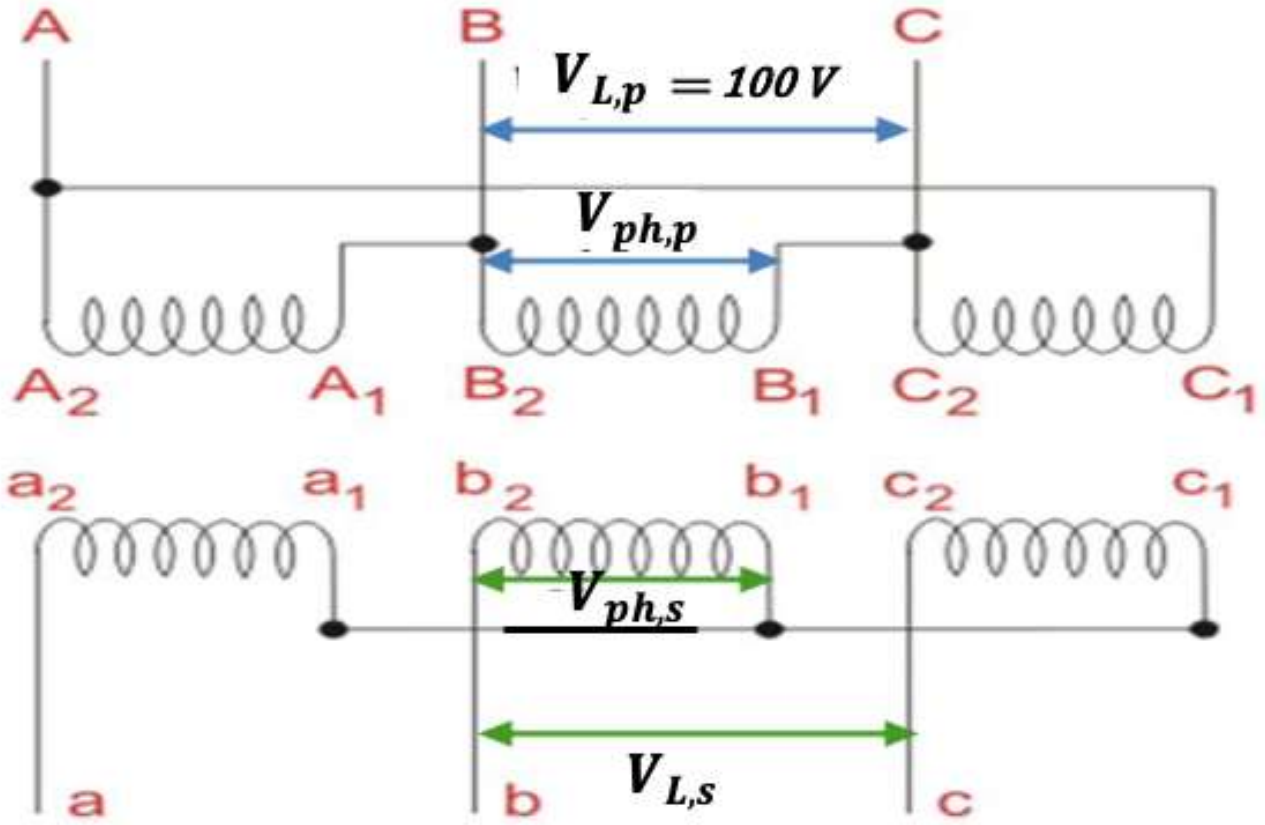

Given:

$S = 50\,VA$ | $V_{L,p} = 100\,V$

$f = 50\,Hz$ | $N_p = 500$

$N_s = 100$

DELTA PRIMARY

$$V_{L,p} = V_{ph,p}$$

$$I_{L,p} = \sqrt{3} I_{ph,p}$$

STAR SECONDARY

$$V_{L,s} = \sqrt{3} V_{ph,s}$$

$$I_{L,s} = I_{ph,s}$$

EXAMPLE E3.7 | SOLUTION: DELTA–STAR (Dy)

1 Draw and label | 2 Primary phase voltage | 3 Secondary phase voltage | 4 Secondary line voltage | 5 Primary phase current | 6 Secondary phase current | 7 Secondary line current

VOLTAGE CALCULATIONS — STEP 2, STEP 3 AND STEP 4

$$V_{L,p} = 100\ \text{V} \quad | \quad N_p = 500 \quad | \quad N_s = 100$$

2 STEP 2 PRIMARY PHASE VOLTAGE

DELTA PRIMARY

$$V_{L,p} = V_{ph,p}$$

$$V_{ph,p} = V_{L,p}$$

$$V_{ph,p} = 100\ \text{V}$$

3 STEP 3 SECONDARY PHASE VOLTAGE

$$\frac{V_{ph,p}}{V_{ph,s}} = \frac{N_p}{N_s}$$

$$V_{ph,s} = V_{ph,p} \times \frac{N_s}{N_p}$$

$$V_{ph,s} = 100 \times \frac{100}{500}$$

$$V_{ph,s} = 20\ \text{V}$$

4 STEP 4 SECONDARY LINE VOLTAGE

STAR SECONDARY

$$V_{L,s} = \sqrt{3}\, V_{ph,s}$$

$$V_{L,s} = \sqrt{3} \times 20$$

$$V_{L,s} = 34.64\ \text{V}$$

EXAMPLE E3.7 | SOLUTION: DELTA–STAR (Dy)

1 Draw and label | 2 Primary phase voltage | 3 Secondary phase voltage | 4 Secondary line voltage | 5 Primary phase current | 6 Secondary phase current | 7 Secondary line current

CURRENT CALCULATIONS — STEP 5, STEP 6 AND STEP 7

$S = 50\ \text{VA}$ | $V_{L,p} = 100\ \text{V}$ | $N_p = 500$ | $N_s = 100$

5 STEP 5 PRIMARY PHASE CURRENT

DELTA PRIMARY

$$S = \sqrt{3}\, V_{L,p}\, I_{L,p}$$

$$I_{L,p} = \frac{S}{\sqrt{3}\, V_{L,p}}$$

$$I_{L,p} = \frac{50}{\sqrt{3} \times 100} = 0.2887\ A$$

$$I_{ph,p} = \frac{I_{L,p}}{\sqrt{3}}$$

$$I_{ph,p} = \frac{50}{3 \times 100} = \frac{1}{6}\ A$$

$$I_{ph,p} = 0.1667\ A$$

6 STEP 6 SECONDARY PHASE CURRENT

$$\frac{I_{ph,s}}{I_{ph,p}} = \frac{N_p}{N_s}$$

$$I_{ph,s} = I_{ph,p} \times \frac{N_p}{N_s}$$

$$I_{ph,s} = \frac{1}{6} \times \frac{500}{100}$$

$$I_{ph,s} = \frac{5}{6}\ A$$

$$I_{ph,s} = 0.8333\ A$$

7 STEP 7 SECONDARY LINE CURRENT

STAR SECONDARY

$$I_{L,s} = I_{ph,s}$$

$$I_{L,s} = \frac{5}{6}\ A$$

$$I_{L,s} = 0.8333\ A$$

Final current values rounded to 4 decimal places.

EXAMPLE

EXAMPLE E3.8 | THREE-PHASE TRANSFORMER

THE EXAMPLE

A 150 VA three-phase transformer is connected in star–delta (Yd), as shown in Figure E3.8. The primary is supplied with a 415 V, 50 Hz three-phase supply. There are 70 primary turns and 700 secondary turns per phase. Calculate:

(i) the secondary phase and line voltages;
(ii) the secondary phase and line currents.

GIVEN DATA

$S = 150$ VA | $V_{L,p} = 415$ V | $f = 50$ Hz | $N_p = 70$ | $N_s = 700$

Assume a balanced ideal transformer; S is the total three-phase rating.

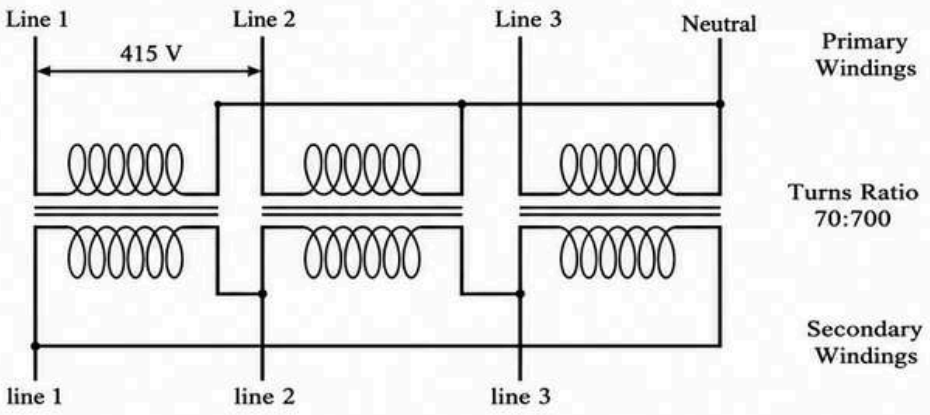

Figure E3.8: Star–delta connection

YOUR SEVEN-STEP GUIDE | Star primary → Delta secondary

INTERACTIVE PAGE

1 STEP 1 – IDENTIFY AND LABEL
Use Figure E3.8; label the given values and unknowns.

2 STEP 2 – PRIMARY PHASE VOLTAGE
Use the star relationship to find $V_{ph,p}$.

3 STEP 3 – SECONDARY PHASE VOLTAGE
Apply the turns ratio to find $V_{ph,s}$.

4 STEP 4 – SECONDARY LINE VOLTAGE
Use the delta relationship to find $V_{L,s}$.

5 STEP 5 – PRIMARY PHASE CURRENT
Use $S = 3\,V_{ph,p}I_{ph,p}$ to find $I_{ph,p}$.

6 STEP 6 – SECONDARY PHASE CURRENT
Apply the inverse turns ratio to find $I_{ph,s}$.

7 STEP 7 – SECONDARY LINE CURRENT
Use the delta relationship to find $I_{L,s}$.

Click a step number to view its solution.

EXAMPLE E3.8 | SOLUTION: STAR–DELTA (Yd)

1 Identify and label | 2 Primary phase voltage | 3 Secondary phase voltage | 4 Secondary line voltage | 5 Primary phase current | 6 Secondary phase current | 7 Secondary line current

STEP 1 — IDENTIFY AND LABEL THE CONNECTION

Use Figure E3.8 to identify the star primary and delta secondary. Label the given values and unknowns.

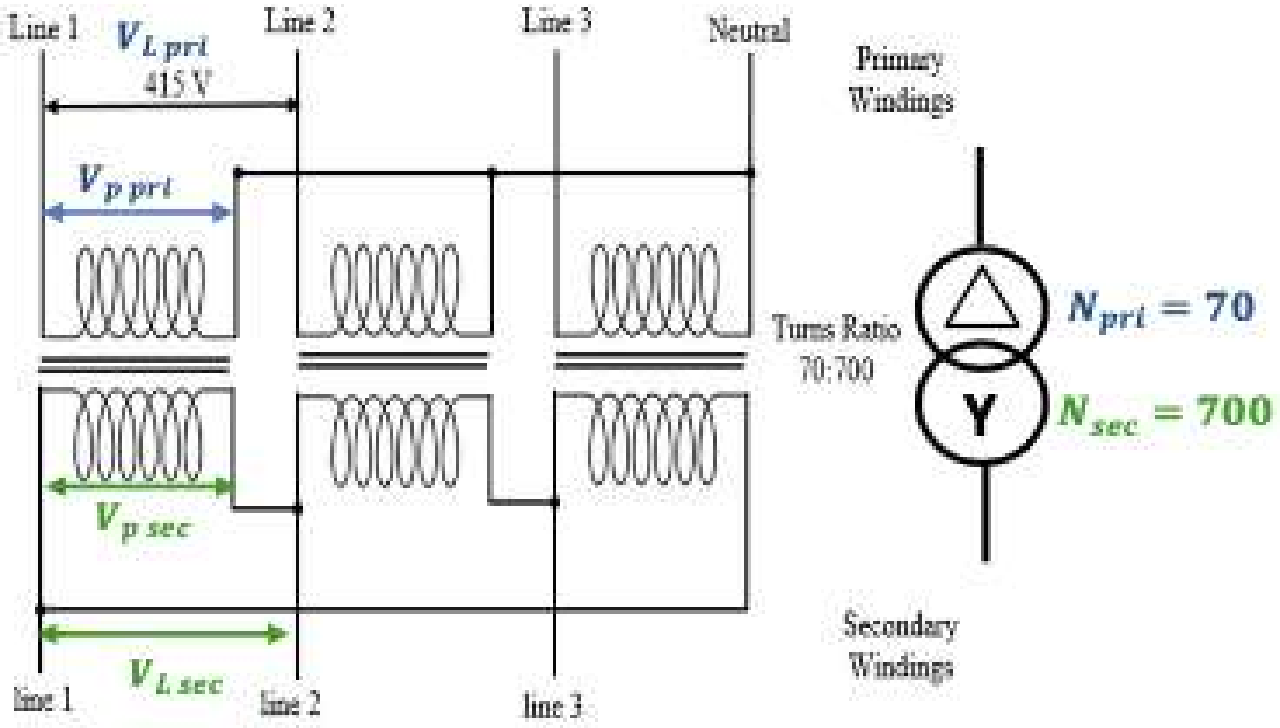

Given:

$S = 150$ VA
$f = 50$ Hz
$V_{L,p} = 415$ V
$N_p = 70$
$N_s = 700$

STAR PRIMARY

$$V_{L,p} = \sqrt{3}\, V_{ph,p}$$
$$I_{L,p} = I_{ph,p}$$

DELTA SECONDARY

$$V_{L,s} = V_{ph,s}$$
$$I_{L,s} = \sqrt{3}\, I_{ph,s}$$

EXAMPLE E3.8 | SOLUTION: STAR–DELTA (Yd)

1 Identify and label | 2 Primary phase voltage | 3 Secondary phase voltage | 4 Secondary line voltage | 5 Primary phase current | 6 Secondary phase current | 7 Secondary line current

VOLTAGE CALCULATIONS — STEP 2, STEP 3 AND STEP 4

$$V_{L,p} = 415\ \text{V} \quad | \quad N_p = 70 \quad | \quad N_s = 700$$

2 STEP 2 PRIMARY PHASE VOLTAGE

STAR PRIMARY

$$V_{L,p} = \sqrt{3}\,V_{ph,p}$$

$$V_{ph,p} = \frac{V_{L,p}}{\sqrt{3}}$$

$$V_{ph,p} = \frac{415}{\sqrt{3}}$$

$$V_{ph,p} = 239.6\ \text{V}$$

3 STEP 3 SECONDARY PHASE VOLTAGE

$$\frac{V_{ph,p}}{V_{ph,s}} = \frac{N_p}{N_s}$$

$$V_{ph,s} = V_{ph,p} \times \frac{N_s}{N_p}$$

$$V_{ph,s} = \frac{415}{\sqrt{3}} \times \frac{700}{70}$$

$$V_{ph,s} = 2.396\ \text{kV}$$

4 STEP 4 SECONDARY LINE VOLTAGE

DELTA SECONDARY

$$V_{L,s} = V_{ph,s}$$

$$V_{L,s} = 2.396\ \text{kV}$$

$$V_{L,s} = 2.396\ \text{kV}$$

EXAMPLE E3.8 | SOLUTION: STAR–DELTA (Yd)

1 Identify and label | 2 Primary phase voltage | 3 Secondary phase voltage | 4 Secondary line voltage | 5 Primary phase current | 6 Secondary phase current | 7 Secondary line current

CURRENT CALCULATIONS — STEP 5, STEP 6 AND STEP 7

$S = 150\ \text{VA}$ | $V_{L,p} = 415\ \text{V}$ | $N_p = 70$ | $N_s = 700$

5 STEP 5 — PRIMARY PHASE CURRENT

STAR PRIMARY

$$S = \sqrt{3}\,V_{L,p}\,I_{L,p}$$

$$I_{L,p} = \frac{S}{\sqrt{3}\,V_{L,p}}$$

$$I_{L,p} = \frac{150}{\sqrt{3}\times 415}$$

$$I_{ph,p} = I_{L,p}$$

$$I_{ph,p} = 0.2087\ A$$

6 STEP 6 — SECONDARY PHASE CURRENT

$$\frac{I_{ph,s}}{I_{ph,p}} = \frac{N_p}{N_s}$$

$$I_{ph,s} = I_{ph,p} \times \frac{N_p}{N_s}$$

$$I_{ph,s} = \frac{150}{\sqrt{3}\times 415} \times \frac{70}{700}$$

$$I_{ph,s} = 0.02087\ A$$

$$I_{ph,s} = 20.87\ mA$$

7 STEP 7 — SECONDARY LINE CURRENT

DELTA SECONDARY

$$I_{L,s} = \sqrt{3}\,I_{ph,s}$$

$$I_{L,s} = \sqrt{3} \times \frac{150}{\sqrt{3}\times 415} \times \frac{70}{700}$$

$$I_{L,s} = 0.03614\ A$$

$$I_{L,s} = 36.14\ mA$$

Final values rounded; use unrounded values in calculations.

PROBLEMS | THREE-PHASE TRANSFORMER

SOLVE THE FOLLOWING PROBLEMS

P3.1

A 1 kVA three-phase transformer is connected in star–star (Yy) and supplied by a 415 V, 50 Hz three-phase supply. The transformer has 552 primary turns and 213 secondary turns per phase.

(i) Draw and label the winding connections.

(ii) Calculate the secondary-side voltages.

P3.2

A 150 VA three-phase transformer is connected in delta–delta (Dd), as shown in Figure P3.2, and supplied by a 400 V, 50 Hz three-phase supply. The transformer has 111 primary turns and 333 secondary turns per phase.

Label the primary line voltage ($V_{L,p}$), primary phase voltage ($V_{ph,p}$), secondary line voltage ($V_{L,s}$), and secondary phase voltage ($V_{ph,s}$) on the given figure. Calculate all primary and secondary line and phase currents.

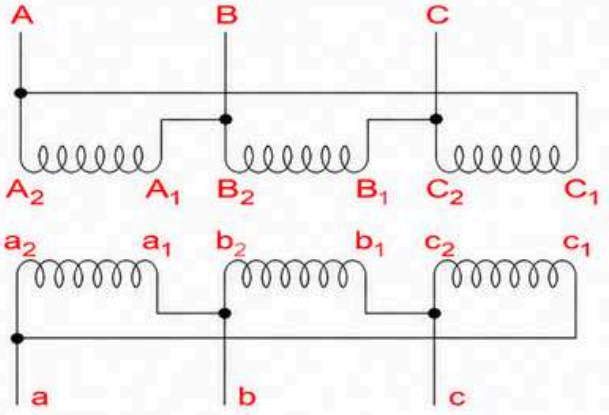

Figure P3.2

Try It Yourself First, Then Check the Solution!

SOLUTION

TYPES OF TRANSFORMER

Transforming Power for a Better Tomorrow



- A variety of types of electrical transformer are made for different purposes.
- There are various types of transformer used in the electrical power system for different purposes, like generation, distribution and transmission and utilization of electrical power.
- The different types of transformer are step up and step down transformer, power transformer, distribution transformer, instrument transformer comprising current and potential transformer, single phase and three phase transformer, auto transformer, etc.

Types of transformer

Center-tapped

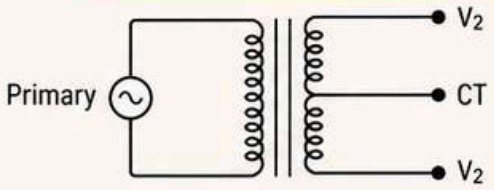

- A transformer with a tapped secondary winding at the mid-point (center tap).
- Provides two equal secondary voltages with a common neutral point.

Multiple-winding

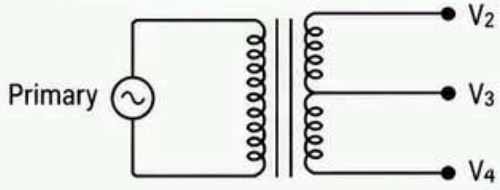

- A transformer with more than one secondary winding.
- Provides two or more different output voltages from a single transformer.

Autotransformer

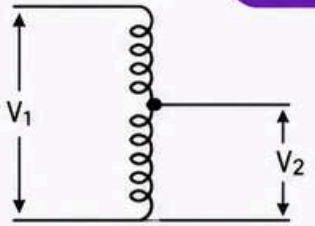

- A transformer with a single winding which acts as both primary and secondary.
- A portion of the winding is common to both input and output.
- Used for voltage transformation with less size, weight and cost.

Different Types, Greater Possibilities

RELIABLE POWER
SUSTAINABLE TOMORROW

CENTER-TAPPED TRANSFORMER

One Transformer, Two Useful Voltages



Operation

- Works almost the same as a usual transformer.
- The secondary winding has a center tap, which divides the winding into two equal parts.
- Provides two output voltages at the two end lines with respect to the center tap (neutral).
- If the secondary winding has N_A and N_B turns, the output voltages are given by:

$$V_A = \frac{N_A}{N_P} \times V_P \qquad V_B = \frac{N_B}{N_P} \times V_P$$

Wiring and terminal of center-tapped transformer

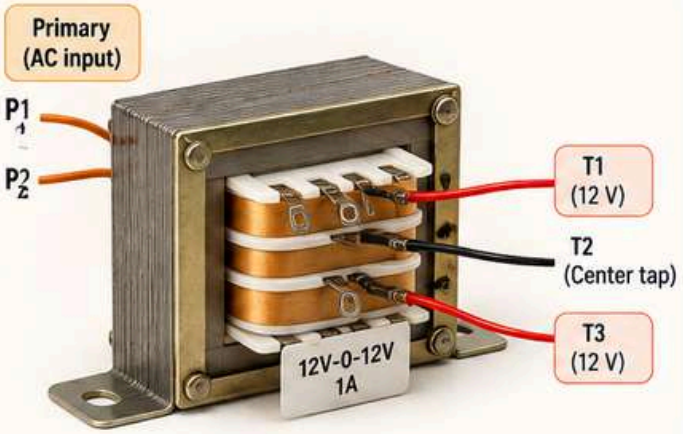

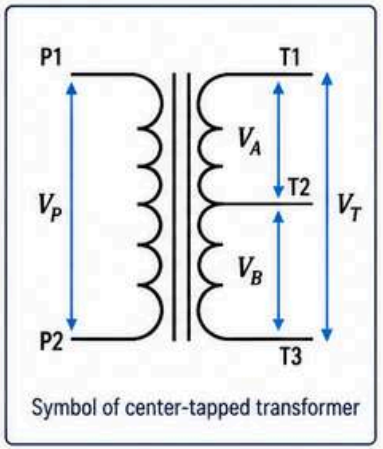

Symbol of center-tapped transformer

Application

Household:

- Allows heavy duty appliances like air conditioner to run 240 V across the full winding.
- Small appliances like mixer and along with incandescent or florescent light to run on 120 V.

A center-tapped transformer is commonly used in household power supply to provide two different voltage levels (e.g. 120 V and 240 V) from a single transformer.

Example in daily life



Distribution transformer with center-tapped secondary (120/240 V) for residential supply.



Air conditioner (240 V)



Light bulb (120 V)

MULTIPLE-WINDING TRANSFORMER

Multiple Outputs Greater Flexibility



Key Features

1. Known as multi coil or multi winding transformer.
2. Contains one or more secondary windings.
3. The voltage polarities are differecs (negative/positive).
4. Can be single phase or three phase.
5. Can be step up or step down.
6. Primary winding can be connected together in various configuration.
7. Two windings must be electrically identical to connect together as parallel circuit.

A multiple-winding transformer provides two or more different output voltages from a single transformer.

Single phase multiple-winding transformer



Single phase multiple-winding transformer

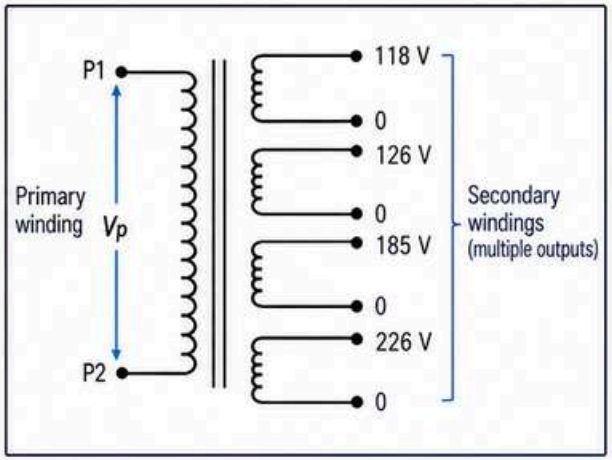

Applications in Real Life



Control circuits
Provide different control voltages for machine tools and industrial equipment.



Power supply units
Used in electronic devices that require multiple voltage outputs (e.g. 5 V, 12 V, 24 V).



Audio equipment
Provide different windings for power supply, audio circuits and impedance matching.



Test and instrumentation
Supply several voltage levels for measuring and calibration equipment.

One Transformer. Multiple Voltages. Wider Possibilities.

RELIABLE POWER
SUSTAINABLE TOMORROW

AUTOTRANSFORMER

Simple Design
Efficient Transformation

Operation

- An autotransformer is a transformer with only one winding wound on a laminated core.
- Portions of the same winding act as both the primary and secondary sides of the transformer.
- Voltage is obtained from a tapping point on the winding.
- Can be designed to step up or step down the voltage.
- Used when the primary to secondary ratio is close to unity.
- Can be single phase or three phase.

Circuit diagram of autotransformer



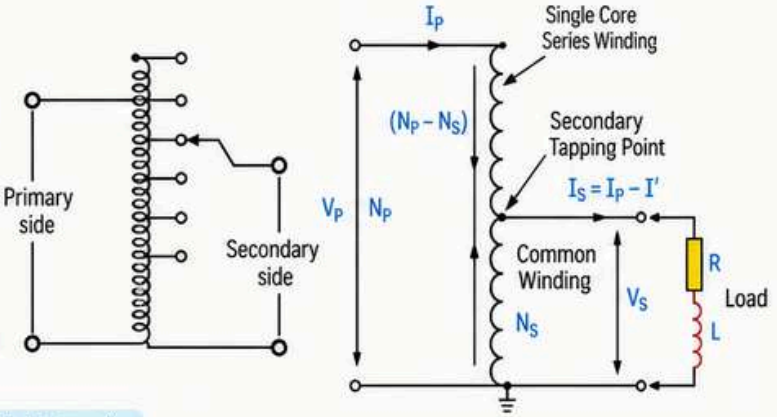

Single-phase autotransformer (variable type)

Applications in Real Life

Autotransformers are widely used where a small change in voltage is required and high efficiency is desired.



Variable AC supply (Variac)
Used in laboratories and workshops to provide an adjustable AC voltage (0–250 V).



Starting of induction motors
Used to reduce the starting current by applying a reduced voltage to the motor.



Voltage regulation in transmission lines
Used to regulate the voltage of transmission and distribution lines (small voltage adjustments).



Railway electrification
Used for small voltage transformation in electric railway systems.

Key Point: One winding | Tapped output | High efficiency | Used for small voltage change



RECAP QUIZ

Topic 3: Transformers

Test your mastery on transformer construction, mutual inductance, turn ratios, 3-phase connections (Star & Delta), and special transformer types derived directly from your lecture notes.

10 Questions
1 question per page format

Next & Back
Skip and revisit any time

Formulas & Math
Accurate notation & review

Start RECAP QUIZ →



SCAN ME!

4 DISTRIBUTION SYSTEM



MIND MAP

OVERVIEW TOPIC 4

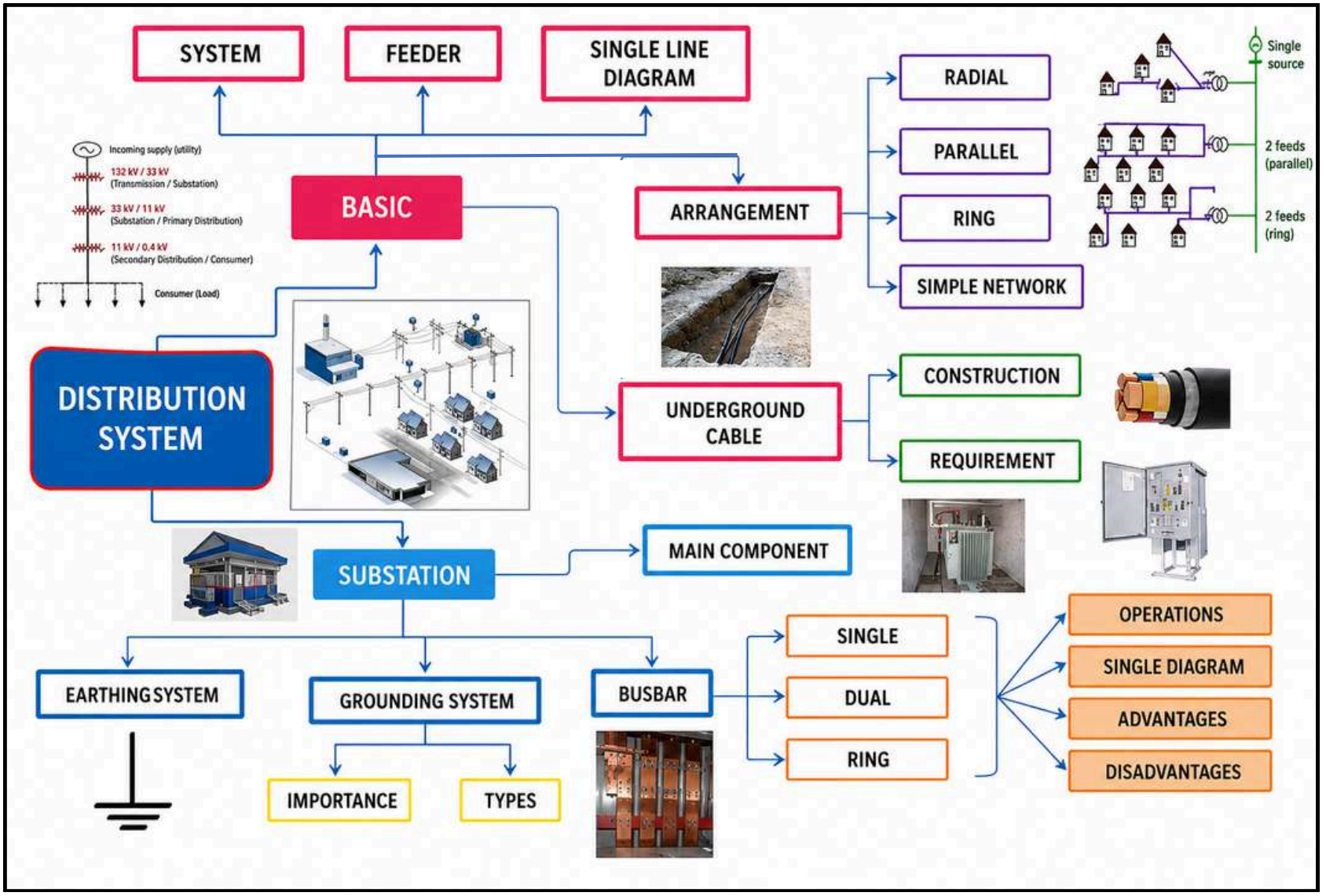

INTRODUCTION

- The distribution system is the part which connects power system and consumer's service-entrance equipment via power lines; distributes electric energy to the end user.
- Distributes power from distribution substation to local use.

HOW POWER REACHES YOU



Generating Station → Transmission Substation 132kV – 275kV → Distribution Substation (132kV/33kV) → Local Use (Consumers)

Generation → Transmission → Distribution → Consumers



DISTRIBUTION SYSTEM

Connects power system to the consumers and delivers electric energy to the end user.

FEEDER SYSTEM



- To feed the electrical power from the generating station to the substation.
- Have large current-carrying capacity.
- Generally used for high voltage distribution system.
- Designed based on current carrying through it.

DISTRIBUTORS



- To distribute the supply further from the substation.
- Designed based on voltage.
- Typically low voltage distribution systems.
- Available in secondary distribution systems.

SERVICE MAINS



- To make the supply available at the consumers.
- Connects the last point of distribution to consumers.
- Ensures electricity is available and safe for use.

KEY TAKEAWAY: From generation to the consumer, the distribution system is the final link that ensures electricity is delivered **safely and reliably** to us every day.



SINGLE LINE DIAGRAM FOR A THREE-PHASE SYSTEM

DEFINITION

- Single Line Diagram (SLD) is depicting the electrical distribution system by a graphic representation.
- In power engineering, a one-line diagram or single-line diagram is a simplified notation for representing a three-phase power system.

SINGLE LINE DIAGRAM (THREE-PHASE SYSTEM)

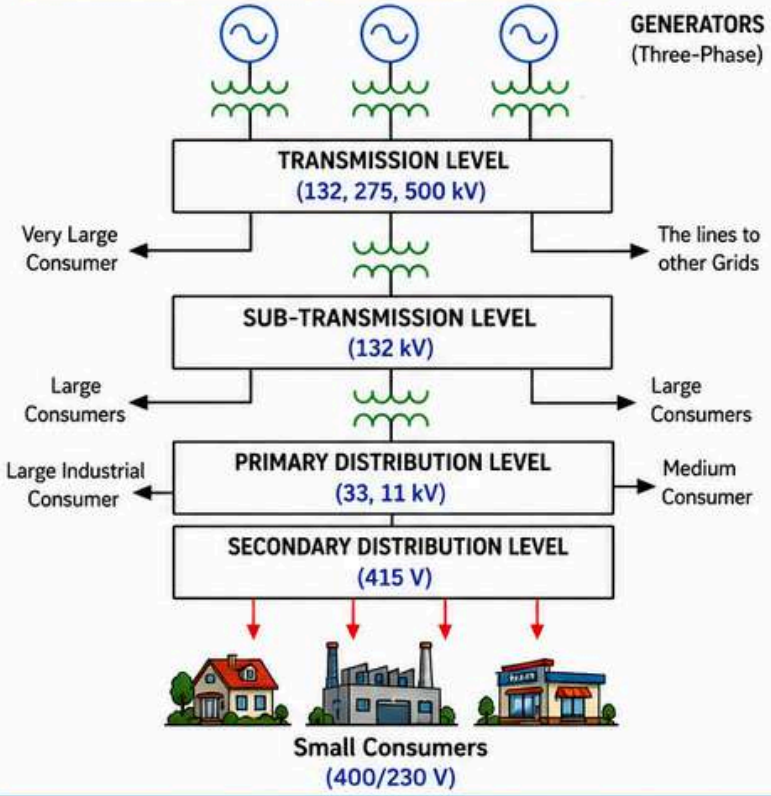



1 TRANSMISSION LEVEL

- High voltage for long distance transmission; low voltage for utility use.
- Generation voltage is usually 11kV and 33 kV.



2 SUB-TRANSMISSION LEVEL

- Voltage is stepped down to 132kV and fed to sub-transmission system.
- Located in the region of the load centres.



3 PRIMARY DISTRIBUTION LEVEL

- Voltage is further stepped down to 33kV and 11kV.
- Large industrial consumers at 33kV; smaller industrial at 11kV.



4 SECONDARY DISTRIBUTION LEVEL

- Voltage is stepped down further by distribution transformer in residential and commercial area.
- Supplied at 400V three phase and 230V single phase.

KEY TAKEAWAY

The electrical energy flows from generation → transmission → sub-transmission → primary distribution → secondary distribution → consumers.



DISTRIBUTION ARRANGEMENT

DEFINITION

- The primary function of the electric power distribution system is to receive power at one or more supply points and deliver to the load.
- The selection of a system arrangement has a profound impact upon the reliability and maintainability of the electrical system.
- Radial, parallel, ring and simple network are distribution arrangement systems, combinations of these systems frequently been used.



1 RADIAL DISTRIBUTION SYSTEM

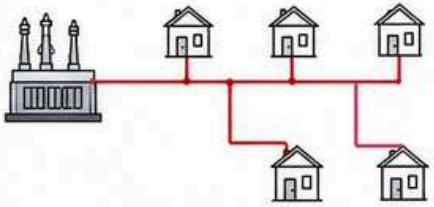

- One power source supplies a group of customers.
- Any fault or line outage interrupts supply to all customers until repaired.
- Cheapest to build and widely used in sparsely populated areas.

2 PARALLEL DISTRIBUTION SYSTEM

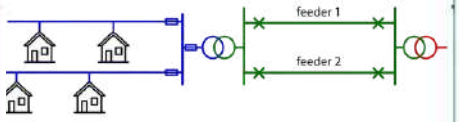

- Two or more feeders in parallel from the same (or different) source.
- Higher initial cost due to more feeders.
- Used where high reliability or load sharing is important.

3 RING DISTRIBUTION SYSTEM

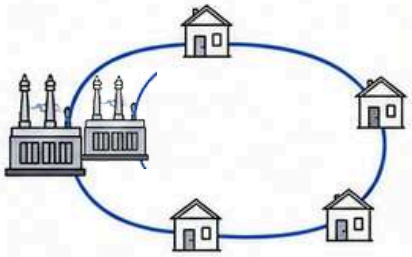

- Forms a loop that returns to the original point.
- Switches isolate a faulted section, supply can be continued from the other direction.
- More reliable and flexible than radial system.

4 SIMPLE NETWORK DISTRIBUTION SYSTEM

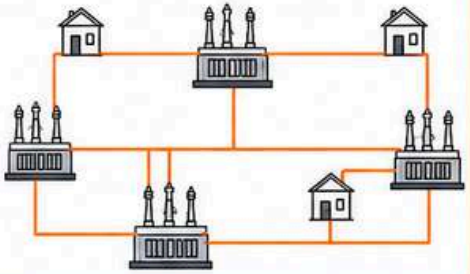

- Interconnected loop system with multiple power sources.
- Very high reliability; supply can come from several directions.
- Most expensive; used in congested, high load density areas.



UNDERGROUND CABLE

UNDERGROUND CABLE DISTRIBUTION IS USED IN PLACE OF OVERHEAD LINES IN AREAS WHERE BETTER APPEARANCE, RELIABILITY AND SAFETY ARE REQUIRED.



RELIABLE

- LESS LIABLE TO INTERFERENCE BY WEATHER, FALLING OBJECTS OR VEHICLE IMPACT.

HIGH CAPACITY

- ABLE TO HANDLE ELECTRICITY SUPPLY DISTRIBUTION WITH A RELATIVELY CONSTANT VOLTAGE LEVEL.

SAFE

- PROTECTS AND ALLOWS SUPPLY OF ELECTRICITY TO SCORE EVEN AFTER AN ERROR HAS OCCURRED.

ECONOMICAL

- INSTALLATION COST MAY BE AT THE SAME LEVEL IN SOME WHICH CASES, EVEN LESS FOR OVERHEAD LINE.

QUICK RECALL

RELIABLE	HIGH CAPACITY	SAFE	ECONOMICAL
Less interference	Stable voltage	Supply continues after fault	Cost can be same or less

KEY TAKEAWAY: UNDERGROUND CABLE = RELIABLE, HIGH CAPACITY, SAFE, ECONOMICAL.

Watch Video **Why Direct Laying Might Be The BEST Method For Underground Cables**

CONSTRUCTION OF UNDERGROUND CABLE

In general, an underground cable is made up of **six main parts.**

1. CONDUCTOR

- One or more cores (conductors) depending on the service.
- Made of copper or aluminium stranded to make the cable flexible.

3. LEAD SHEATH

- Protects the cable from moisture, gases and harmful liquids in the soil and atmosphere.
- Lead alloy or aluminium tape is provided over the insulation.

5. ARMOURING

- Protects the cable from mechanical injury.
- Usually consists of one or two layers of galvanized steel wire or steel tape.
- May be omitted in some cables to avoid excessive sheath loss.

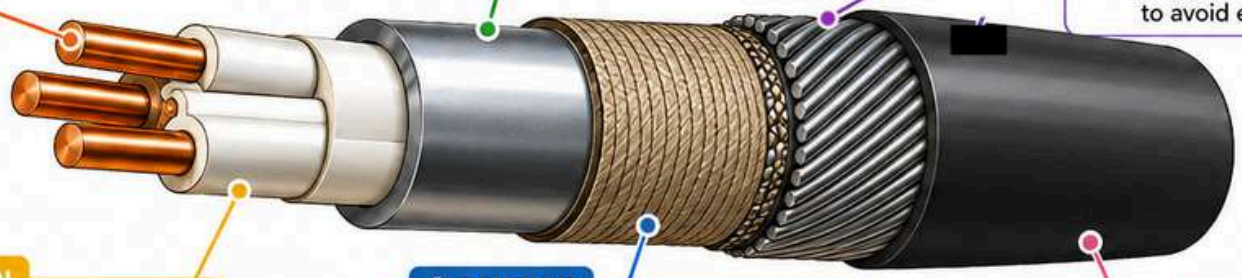

2. INSULATION

- Each core or conductor is covered by a suitable thickness of an insulating material.
- The thickness depends on the voltage rating of the cable.

4. BEDDING

- Protective layer (e.g. jute or hessian tape) over the lead sheath.
- Protects the lead sheath from corrosion and mechanical injury due to armouring.
- May be absent in some cables.

6. SERVING

- Outer covering that protects the armouring from atmospheric conditions.

EASY TO REMEMBER!

1 CONDUCTOR	2 INSULATION	3 LEAD SHEATH	4 BEDDING	5 ARMOURING	6 SERVING
Carries current	Stops leakage	Blocks moisture	Protects sheath	Protects from mechanical damage	Protects from weather

KEY TAKEAWAY: Six layers work together to ensure safe, reliable and durable underground cable performance.

Watch Video **The SHOCKING TRUTH About Underground Cables You Need to Know NOW**

REQUIREMENTS

Various types of cable are available but the choice depends on the operating voltage and service requirement. A cable must fulfill some of the basic requirements.

1 CONDUCTOR

- Tinned copper or aluminium conductor of high conductivity.



2 SIZE & VOLTAGE

- Adequate conductor size to carry load without overheating and within permissible voltage drop.



3 INSULATION

- Proper insulation thickness for safety and reliable operation.



4 MECHANICAL PROTECTION

- Suitable mechanical protection to withstand rough handling.



5 MATERIAL QUALITY

- Materials must ensure complete chemical and physical stability throughout cable life.



KEY TAKEAWAY: A good underground cable must be conductive, properly sized, well insulated, mechanically protected and made from stable, high quality materials.

DISTRIBUTION SUBSTATION

A distribution substation is an electrical installation that receives electricity from the high-voltage transmission network and transforms it to lower voltages for safe and efficient supply to local consumers. It plays a vital role in distributing electricity reliably and safely within communities.

It is uneconomical to directly connect electricity consumers to the high-voltage main transmission network, unless they use large amounts of power.

Change the transmission or subtransmission voltage to lower levels for use by end-users.



The role of distribution substations

Reduces voltage to a value suitable for local distribution.

Located near to the end-users.

THE FUNCTIONS OF MAIN COMPONENT IN DISTRIBUTION SYSTEM

TYPICAL DISTRIBUTION SUBSTATION

Electricity is received from the transmission line at 11 kV and then transformed and distributed to consumers through the distribution network.

POWER FLOW (MAIN SYSTEM)

1 11 kV → 2 SWITCHGEAR → 3 BUSBARS → 4 TRANSFORMER → 5 LV BUSBAR (400/230 V) → OUTGOING FEEDERS TO CONSUMERS

1 SUPPLY LINE



- Distribution substation is connected to a sub-transmission system via at least one supply line, called a primary feeder.
- Typically supplied by two or more supply lines to increase reliability.
- Can be an overhead line or underground feeder depending on location.

2 SWITCHGEAR



- Encloses primary switching and interrupting devices together with control and regulating equipment.
- Includes circuit breakers, disconnect switches, busbars, CTs, insulators, enclosures and secondary devices for monitoring and control.

3 BUSBARS



- To carry large current and to distribute current to multiple circuits within switchgear or equipment.

4 TRANSFORMER



- Transformer steps down supply line voltage from 11 kV to distribution level (400/230 V).

5 OUTGOING FEEDERS



- A number of outgoing feeders are connected to the substation bus to carry power from the substation to points of service.

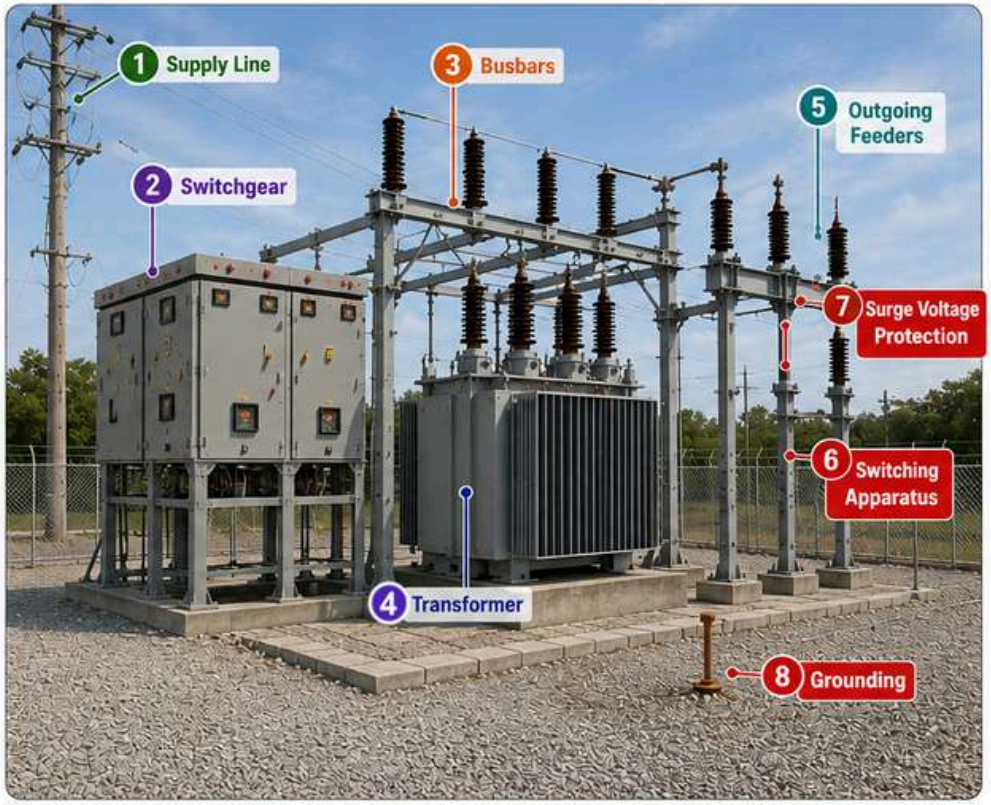

PROTECTION & SAFETY SYSTEMS (SUPPORT AND PROTECT THE SYSTEM)

6 SWITCHING APPARATUS



- Includes switches, fuses, circuit breakers and service protectors.
- Used for isolation, load interruption and transferring service between different sources.
- Fuses provide overcurrent protection by melting when excess current flows.
- Circuit breakers open and close circuits automatically or manually.

7 SURGE VOLTAGE PROTECTION



- The appropriate application of surge-protective devices will lessen the magnitude and duration of voltage surges seen by the protected equipment.
- Surge arresters are used in power systems to protect insulation from overvoltages.

8 GROUNDING



- Ensures intentional connection between system phases and ground/equipment.
- Needed to control overvoltages and provide a path for ground-current flow for protection.
- Equipment grounding interconnects all non-current-carrying metallic structures and equipment.

KEY TAKEAWAY

- Power enters from the supply line.
- Switchgear protects, controls and isolates the incoming supply.
- Busbars collect and distribute power.
- Transformer steps down voltage to distribution level.
- Outgoing feeders deliver power to consumers.
- Protection & safety systems ensure reliability, safety system stability.

THE MAIN COMPONENT OF DISTRIBUTION SYSTEM

ANALOGY OF DISTRIBUTION SYSTEM

In Malaysia, electricity is usually received from the transmission line at 11 kV and then changed to 400 V for 3–phase system and 230 V for single phase system.

Transmission line → 11 kV → THE MAIN COMPONENT OF DISTRIBUTION SYSTEM → 400 V → 3–phase system; 230 V → Single phase system

11 kV → SWITCHGEAR → TRANSFORMER → LV BUSBAR → FEEDER

11kV/415V SINGLE LINE DIAGRAM OF DISTRIBUTION SUBSTATION

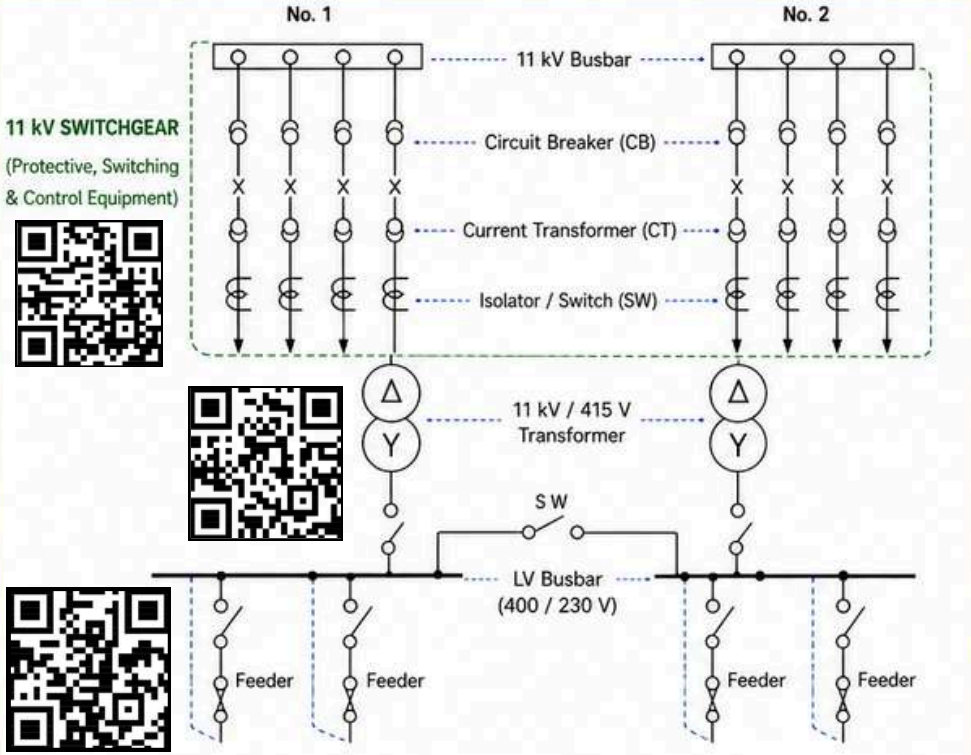

MAIN COMPONENTS (FROM TOP TO BOTTOM)



1 **11 kV BUSBAR**
- Common connection point for incoming supply from the transmission line.



2 **CIRCUIT BREAKER (CB)**
- Protects the system by interrupting fault current.



3 **CURRENT TRANSFORMER (CT)**
- Steps down high current to a safe value for metering and protection.



4 **ISOLATOR / SWITCH (SW)**
- Provides visible isolation for maintenance and safety.



5 **11 kV / 415 V TRANSFORMER**
- Steps down the 11 kV voltage to 415 / 240 V for distribution.



6 **LV BUSBAR (400/230 V)**
- Distributes low voltage power to outgoing feeders.



7 **FEEDER (FEEDER PILLAR / LVDB)**
- Carries power from the busbar to the consumers.

THE FUNCTIONS OF BUSBAR

1 DEFINITION



- A busbar in electrical power distribution refers to thick strips of copper or aluminium that conduct electricity within a switchboard, distribution board, substation, or other electrical apparatus.

2 FUNCTION

- Function: A medium that connects the various electrical equipment in the substation.

3 INTERMEDIATE DEVICE

- Used as an intermediate device connecting other electrical appliances inside substation.

4 ARRANGEMENT DEPENDS ON DISTRIBUTION

- The arrangement of busbar is depends on electrical energy distribution among the area.

5 TYPE OF BUSBAR ARRANGEMENTS

Type of busbar arrangements:

a. SINGLE

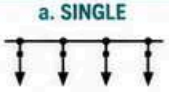

b. DUAL

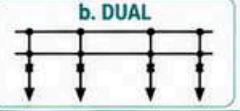

c. RING



6 WIDELY USED

- Busbars (also called buses) can be found throughout the entire power system, from generation to industrial plants to electrical distribution boards.

7 DIFFERENT OPERATIONAL PROCESS

- Each busbar have a different operational process. It depends on the busbar arrangement to the line system where it was installed.

THE FUNCTION OF BUSBAR



BUSBAR = MAIN PATH FOR POWER FLOW

Connects • Distributes • Ensures Reliable Operation

KEY TAKEAWAY

- Busbar is the main path for current flow within a substation.
- It connects equipment, distributes power, and ensures reliable operation of the system.
- The arrangement and operation of busbar depend on the power system design and requirement.
- Proper busbar selection and arrangement ensure safety, efficiency and continuity of power supply.

BUSBAR ARRANGEMENTS

SINGLE Busbar Arrangement

OPERATIONS

- Simplest and cheapest busbar arrangement.
- Each busbar is connected to the generators, transformers and feeders through the circuit breaker and isolator switch.
- If a fault occurs in any of the circuit breaker, the power system should be closed.
- Power can be supplied to other feeder after the damage circuit breaker is isolated from the busbar using isolator switch.

SINGLE LINE DIAGRAM

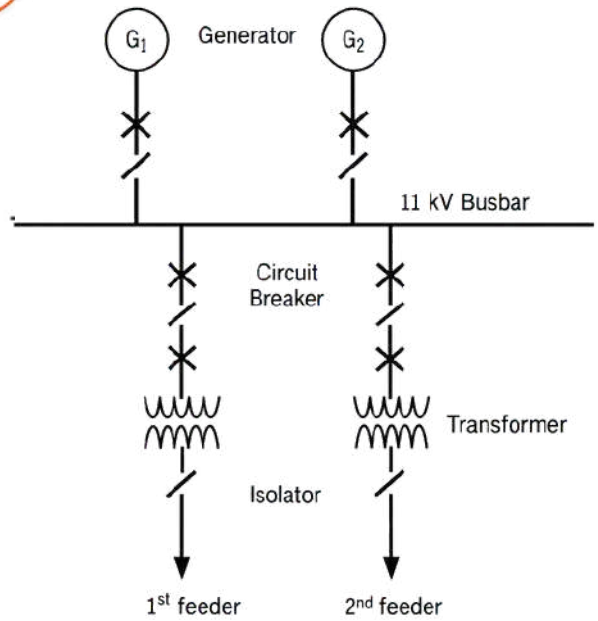

ADVANTAGES

- Low cost
- Simple to operate
- Simple protection

DISADVANTAGES

- If one of the busbar damaged, overall system will be disturb
- Difficult to do any maintenance

DUAL
Busbar Arrangement

OPERATIONS

1. Consists of two dual busbar separated using circuit breakers and isolating switches.

   If one of busbar damaged, the power supply still be supplied to the user by using another busbar.

3. It can be done by opening the busbar circuit breaker and isolator switch that connects the line to the feeder and damaged busbar after circuit breaker to the feeder is off.

   Inspection done by closing the busbar circuit breaker.

5. Then, all the switches on the right are closed and all the switches on the left opened.
6. Finally, the busbar circuit breaker is opened.
7. So, the main busbar exchange obtained by not interrupting the supplies.

SINGLE LINE DIAGRAM

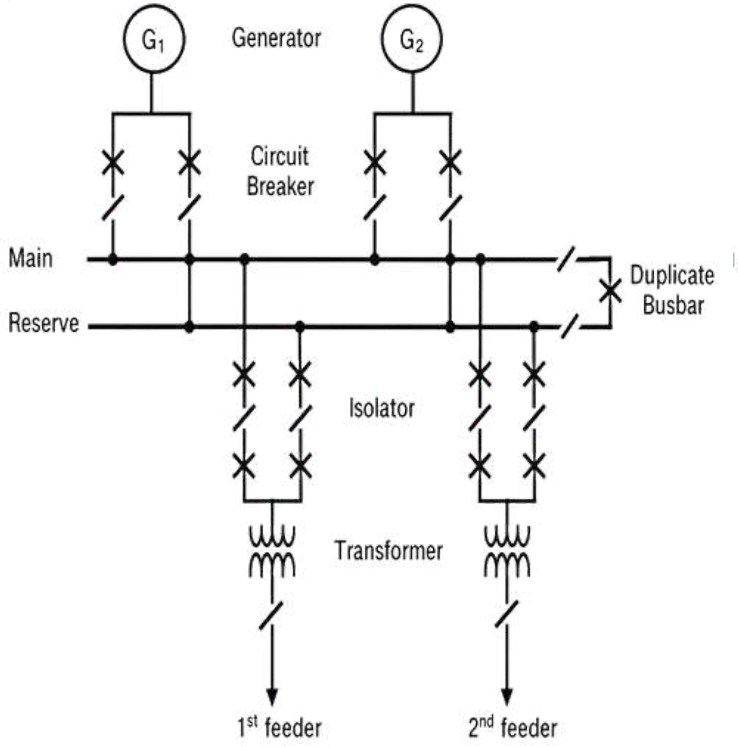

ADVANTAGES

- Continuous power supply.
- Maintenance can be done without disturbing supply to consumers.
- Circuit breaker testing can be done with the reserve line without disturbing main line.

DISADVANTAGES

- Expensive installation and construction cost.

RING
Busbar Arrangement

OPERATIONS

- Covers the area around the supply source where all the loads is connected to it.
- Each feeder supplied with power from two different sources.
- Failure on any busbar, will not interrupt the power supply.
- Circuit breaker installation costs almost as much as a single busbar

SINGLE LINE DIAGRAM

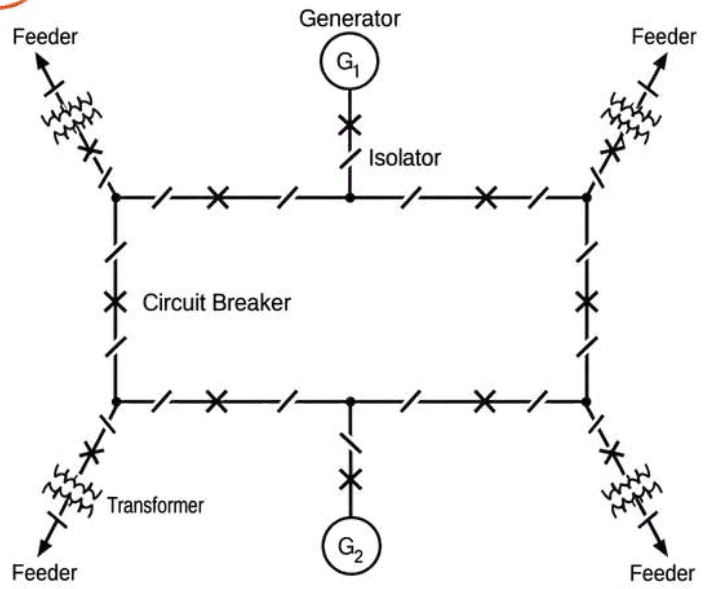

ADVANTAGES

- Feeder gets supply from two different sources.
- Failure on any circuit breaker will not disturb the power supply.
- Maintenance done without disturbing power supply.

DISADVANTAGES

- Open any circuit breaker will caused overload because the current only flow in one direction.
- Difficult to add new cables.

THE IMPORTANCE OF GROUNDING PRACTICE IN POWER SYSTEM

- Prime object of earthing is to provide a **zero potential surface** in and around and under the area where the electrical equipment is installed.





- Earthing is **essential** at every stage of electricity generation, transmission and utilisation.

THE IMPORTANCE OF GROUNDING PRACTICE IN POWER SYSTEM

PERSONAL SAFETY

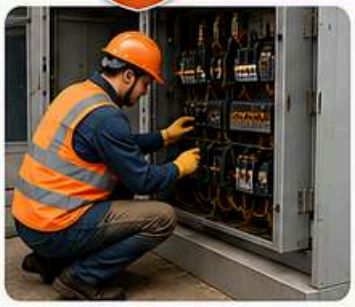

Protects people from electric shock by providing a safe path for fault current to flow into the ground, reducing the risk of injury or death.

PROTECTION OF SYSTEM



Improve the reliability of power supply by quickly clearing faults, minimising outages and system disturbances.

PROTECTION OF EQUIPMENT



Prevent or at least minimize damage to equipment as a result of heavy fault current and lightning, thus improve the reliability of equipment.

TYPES OF GROUNDING PRACTICE IN POWER SYSTEMS

TYPE OF GROUNDING	GROUNDING METHOD / CONFIGURATION
1 Plate and strip earthing 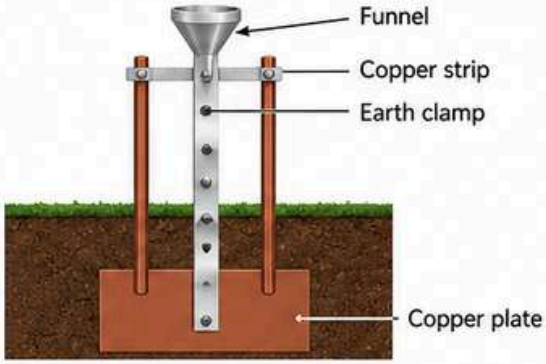	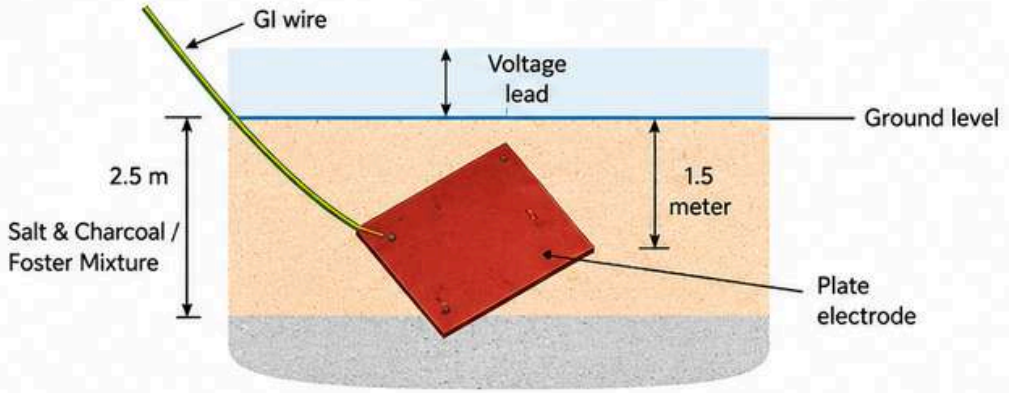
2 Pipe / Rod earthing 	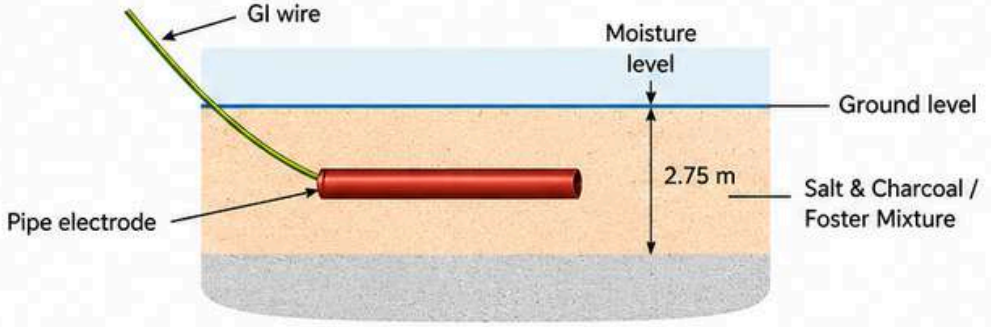
3 Mat earthing 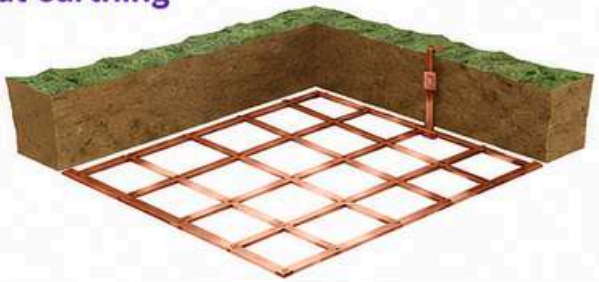	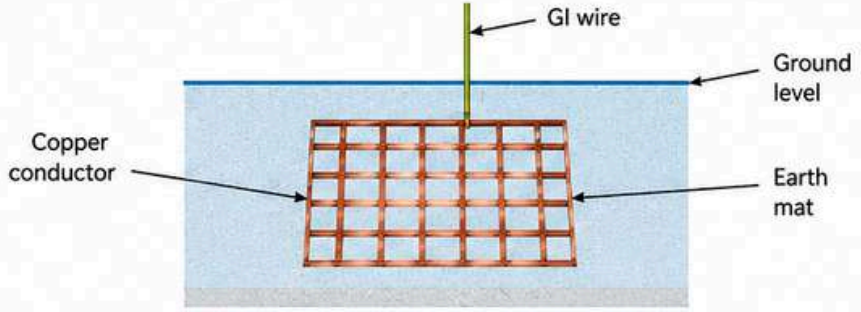

THE LAYOUT OF THE EARTHING SYSTEM OF DISTRIBUTION SUBSTATION

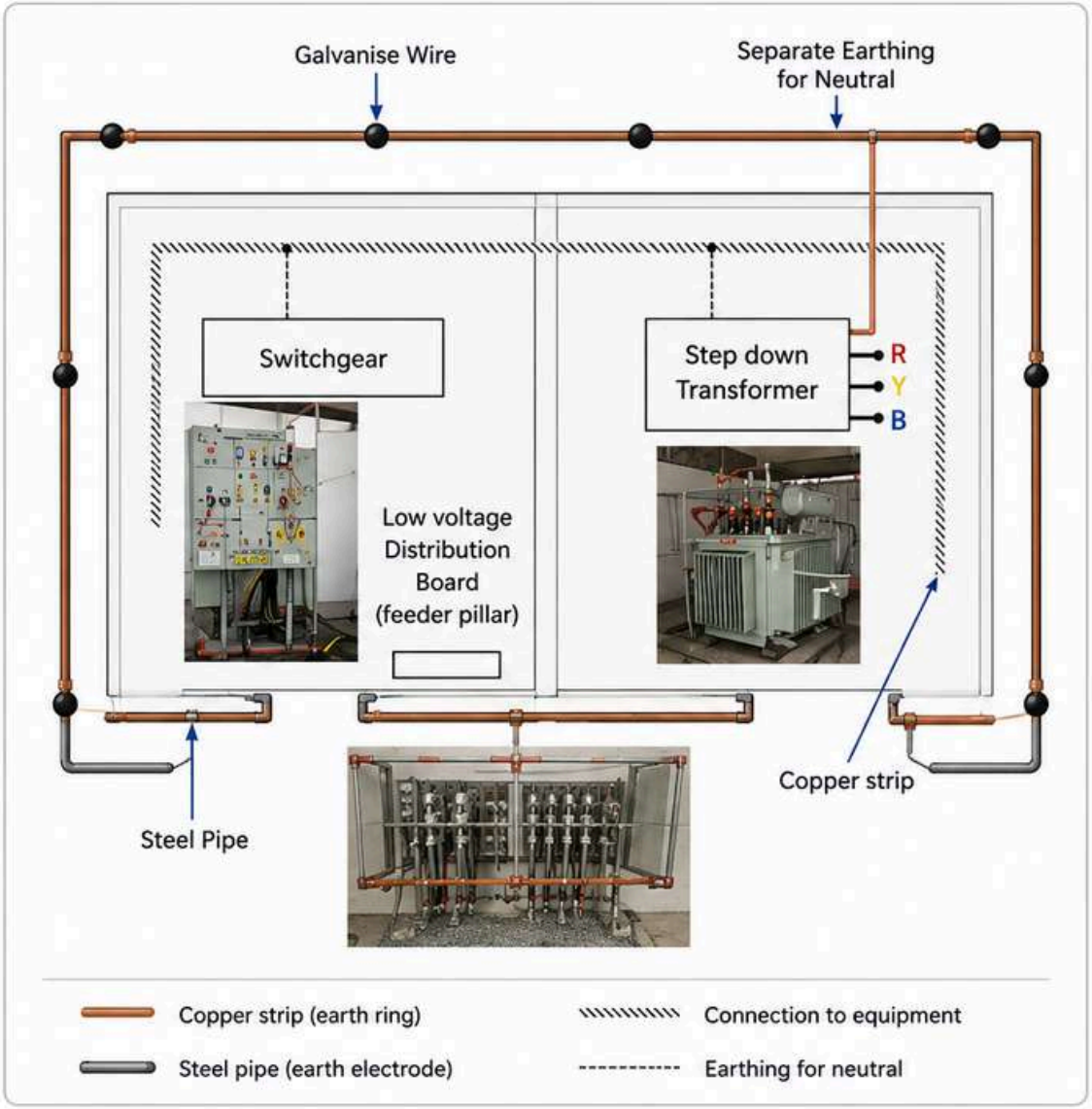

EXPLANATION

- Earthing process in distribution substation is done after all equipment and tools are already installed.
- Purpose of earthing process is to get a smooth current flow when electrical leakage was happened.
- Earthing process is done to all metal things such as switch gear, transformer and low voltage distribution board (feeder pillar).
- The earthing process is done using copper strip that is tight together with screw around substation building.
- Cooper strip is connected to steel pipe through the special metal.

Watch Video **Every Type of Grounding and Earthing System Explained**



RECAP QUIZ

Topic 4: Distribution System

Assess your knowledge of electrical distribution systems, feeder arrangements, underground cables, substation apparatus, busbar configurations, and grounding practices.

10 Questions
1 question per page layout

Next & Back
Revisit and skip any question

Instant Score
Comprehensive answer review

Start RECAP QUIZ →



SCAN HERE

5 FAULT CALCULATION



MIND MAP

OVERVIEW
TOPIC 5

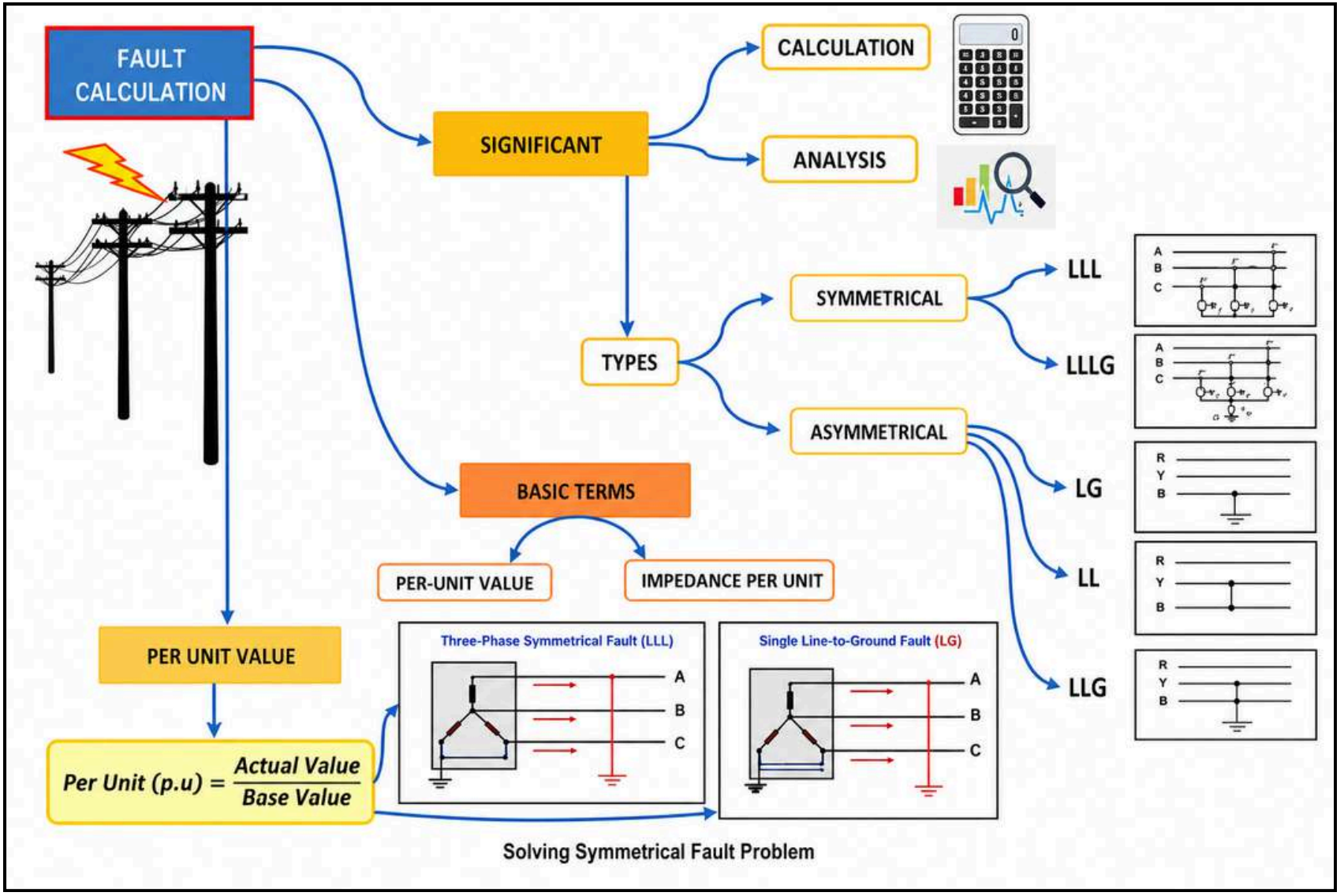

INTRODUCTION

Accurate Analysis for a Reliable Power System

POWERING A SAFER TOMORROW

1. The study and investigation on the fault analysis is **very important** to ensure that the power distribution system can function well.

2. By having knowledge on the fault level of the distribution system, engineers can correctly **specify equipment ratings** and **coordinate relay settings**.

3. The fault analysis of a power system is required in order to provide information for the **selection of switchgear, setting of relays** and **stability of system operation**.

4. A power system is not static but **changes during operation** (switching on or off of generators and transmission lines) and **during planning** (addition of generators and transmission lines).

Simplified power system

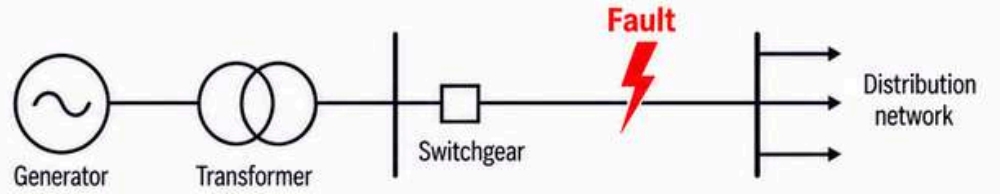

Generation → Transmission → Distribution

Information from fault analysis is used for:

Selection of switchgear



Choose the right switchgear rating based on fault level.

Setting of relays



Coordinate and set protection relay settings to operate correctly.

Stability of system operation



Maintain a stable and reliable power system operation.

KEY MESSAGE

Fault analysis provides essential information to design, operate and plan a **safe, reliable and efficient** power distribution system.

KNOW TODAY FOR A STRONGER TOMORROW

FAULT

Unexpected Events Affecting Power System Operation

Detect Faults Protect the System



RELIABLE POWER FOR A BRIGHTER TOMORROW

1. Faults usually occur in a power system due to either **insulation failure**, **flashover**, **physical damage** or **human error**.
2. May either be **three phase** in nature involving all three phases in a symmetrical manner, or may be **asymmetrical** where usually only one or two phases may be involved.
3. May also be caused by either **short-circuits to earth** or **between live conductors**, or may be caused by **broken conductors** in one or more phases.
4. May occur involving both **short-circuit** and **broken conductor faults** (also known as **open-circuit faults**).

Insulation failure / Flashover



Failure of insulation can cause flashover between conductors or to earth.

Insulation failure

Physical damage



Conductors may be broken due to physical damage such as storms, accidents or falling objects.

Physical damage

Human error



Faults can occur due to human error such as incorrect switching operation or maintenance mistakes.

Human error

Fault to earth / between conductors



Short-circuits may occur to earth or between live conductors.

Short-circuit fault

KEY POINT

Faults are **abnormal conditions** that can disrupt power system operation.

Understand Faults for a Safer and More Reliable Power System

THE SIGNIFICANCE OF FAULT CALCULATION AND ANALYSIS IN THE POWER SYSTEM



1 The fault level calculation using **ohmic value** and **per-unit system**.

Ohmic value

$$I_f = \frac{V}{Z_{eq}}$$

Per-unit system

$$\text{Quantity (p.u.)} = \frac{\text{Actual value}}{\text{Base value}}$$



Different methods, same degree – determine fault level.

2 Fault level is important because:

- It determines the **maximum short circuit ratings** of power equipment such as switchgear and feeder pillar.
- It provides **fault current value** for **overcurrent relay setting**.



SWITCHGEAR RATING

Ensure equipment can withstand maximum short circuit current.



RELAY SETTING

Provide fault current value for **overcurrent** relay setting.

3 Fault analysis is usually carried out in **per-unit quantities** (similar to percentage quantities) as they give solutions which are somewhat **consistent over different voltage and power ratings** and operate on **values of the order of unity**.

Advantages of using per-unit system

- Simplifies **calculations**
- Consistent over different voltage and power ratings
- Values are of the order of unity (around 1.0)



KEY MESSAGE

Accurate fault calculations and analysis help in designing, selecting and setting power system equipment for a **safe, reliable** and **efficient** power system.

TYPES OF FAULT

Identify the Fault
Understand the Systen
Ensure a Reliable Supply



POWER SYSTEMS FOR A BRIGHTER TOMORROW

- Two types of fault in three phase system; **symmetrical** and **asymmetrical**.
- Balanced three phase faults may be **analysed** using an **equivalent single phase circuit**.
- Asymmetrical three phase faults, the use of symmetrical components help to reduce the complexity of the calculations as transmission lines and components are by and large symmetrical, although the fault may be asymmetrical.

FAULT

Symmetrical

Balanced three phase fault

Three-phase short circuit (LLL)



Fault involving all three phases only.

Three-phase-to-ground (LLLG)



Fault involving all three phases and earth.

Asymmetrical

Unbalanced fault

Single line-to-ground (LG)



Fault involving one phase to earth.

Line-to-line (LL)



Fault involving two phases only.

Double line-to-ground (LLG)



Fault involving two phases to earth.

KEY TAKEAWAY

Understanding the types of fault helps in selecting the appropriate analysis method and protection strategy for a **reliable power system.**

SAME KNOWLEDGE A STRONGER TOMORROW

Watch Video **Understanding Power System Faults: A Deep Dive**

I SYMMETRICAL FAULT

Balanced Fault Affects All Phases

RELIABLE POWER FOR A BRIGHTER TOMORROW

- All the phases are **short-circuited to each other and often to earth**.
- Such fault is **balanced** in the sense that the systems remain symmetrical, or we can say that the lines displaced by an equal angle (i.e. 120° in three phase line).
- Two types of common fault; **Three-Phase Short Circuit Fault (LLL)** and **Three-Phase-To-Ground Fault (LLLG)**.

TYPE OF COMMON SYMMETRICAL FAULT

TYPE	CIRCUIT DIAGRAM
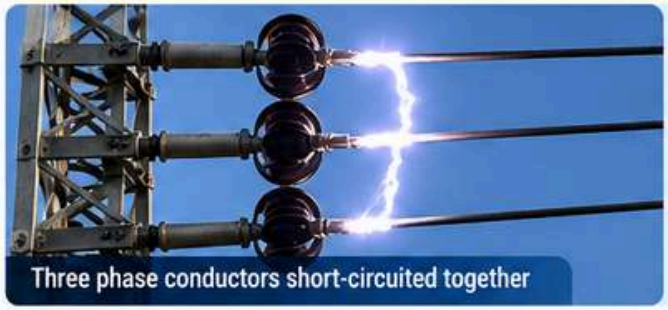 Three phase conductors short-circuited together **THREE-PHASE SHORT CIRCUIT FAULT (LLL)** Fault involving all three phases short-circuited to each other.	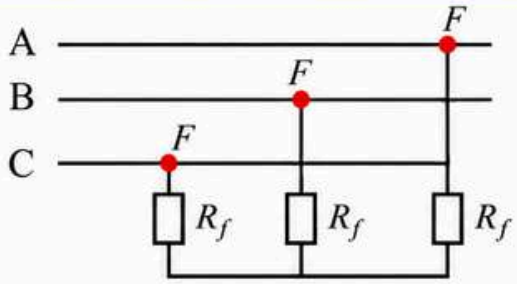
 Three phase conductors short-circuited to earth **THREE-PHASE-TO-GROUND FAULT (LLLG)** Fault involving all three phases short-circuited to each other and to earth.	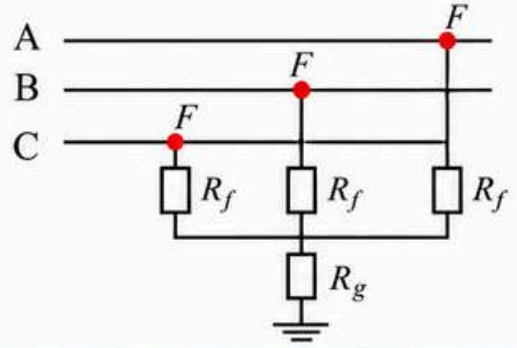

KEY MESSAGE

Symmetrical faults are **balanced faults** that involve **all three phases**, with or without ground connection.

Knowledge Today Power Tomorrow

I ASYMMETRICAL FAULT

Not All Faults Involve All Three Phases



RELIABLE POWER SYSTEMS FOR A BRIGHTER TOMORROW

- Involve only **one or two phases**.
- The three phase lines become **unbalanced**.
- Types of faults occur between **line-to-ground** or **between lines**.
- An unsymmetrical series fault is **between phases** or **between phase-to-ground**.
- Unsymmetrical shunt fault is an **unbalanced** in the line impedances.
- Three types of common fault; **Single Line-To-Ground Fault (LG), Line-To-Line Fault (LL), Double Line-To-Ground Fault (LLG).**

TYPE OF COMMON ASYMMETRICAL FAULT

TYPE		CIRCUIT DIAGRAM
	**SINGLE LINE-TO-GROUND FAULT (LG)** One phase is connected to ground, causing fault current to flow to earth.	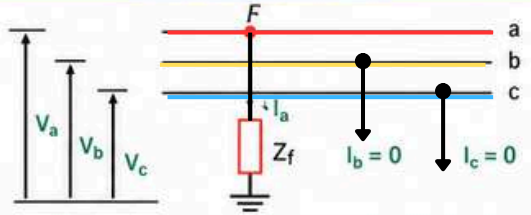
	**LINE-TO-LINE FAULT (LL)** Two phases are short-circuited to each other.	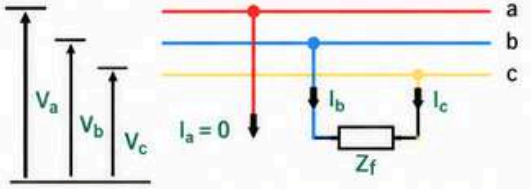
	**DOUBLE LINE-TO-GROUND FAULT (LLG)** Two phases are connected to ground, causing fault current to flow to earth.	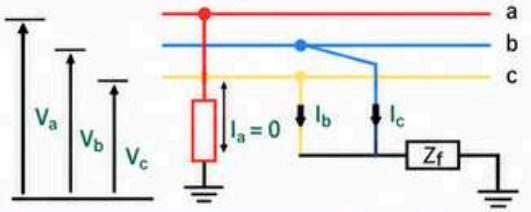

KEY TAKEAWAY

Asymmetrical faults involve **one or two phases**, resulting in an **unbalanced system.** Common types are **LG, LL and LLG.**

Knowledge Empowers A Safer Tomorrow

Watch Video **Every Type of Electrical Fault Explained**

THE BASIC TERMS USED IN POWER SYSTEM FAULT CALCULATION

Understanding Faults for a More Reliable Grid



SAME PRINCIPLES A STRONGER TOMORROW —

- Fault level (MVA_{fault}) refers to the MVA value of a **3-phase balanced fault** in a system.
- An interconnected power system consists of components functioning at **different voltage levels**.
- The electrical analysis at a particular voltage level involves the **transformation of all impedances to a single voltage level**.
- To simplify the calculation, a system called the **per-unit system (p.u)** is devised.

Key Idea

Use common terms and a common base to simplify fault calculations.

Per-unit system

- Per-unit system is a system in which the power, voltage, current and impedance are expressed as a **decimal function or multiple of their base quantities**.
- The p.u system allows the power network consisting of generators, transformers and power lines of different voltage levels to be reduced to a system of equivalent impedances that **simplifies the calculation**.

Actual power system (different voltage levels)

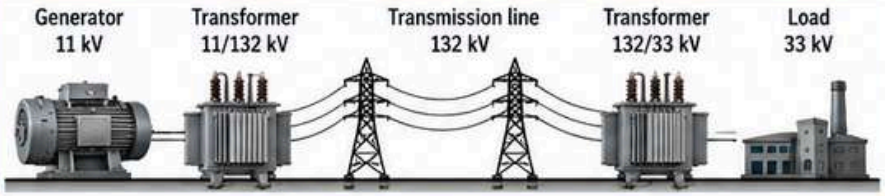

Convert to per-unit system (using common base values)

Per-unit equivalent system (single voltage level)

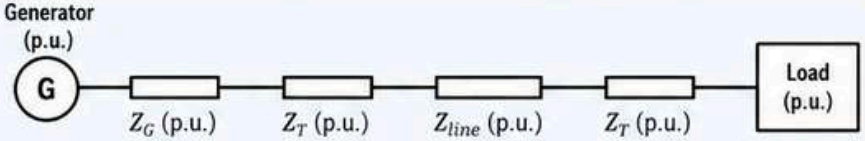

Per-unit quantities

Voltage (p.u.)

$$V_{p.u.} = \frac{V_{actual}}{V_{base}}$$

Current (p.u.)

$$I_{p.u.} = \frac{I_{actual}}{I_{base}}$$

Impedance (p.u.)

$$Z_{p.u.} = \frac{Z_{actual}}{Z_{base}}$$

Power (p.u.)

$$S_{p.u.} = \frac{S_{actual}}{S_{base}}$$

KEY TAKEAWAY

Per-unit system converts all quantities to a **common base**, allowing easy comparison and **simpler fault calculations** in multi-voltage level power systems.

Simpler Analysis Stronger Power Systems

I PER-UNIT VALUE

Different Voltages Same Base Easier Calculations



SIMPLIFY
ANALYSE
SOLVE

- **The per-unit value of a quantity can be expressed as:**

Complex Number (may be real or imaginary)

Actual value in ohm, kV, A or MVA

$$\text{Quantity in p.u} = \frac{\text{actual quantity value}}{\text{base quantity value}}$$

Real Number (base value)

Example

If a transformer has an impedance of 20 Ω and the base impedance is 100 Ω,

$$Z_{p.u} = \frac{Z_{actual}}{Z_{base}} = \frac{20}{100} = 0.2\ p.u.$$

Per-unit value has no unit (dimensionless)!

Four Base Quantities in a Per-Unit System

To completely define a per unit system, at least **four base quantities** are required.

No.	Base Quantity	Symbol	Unit	Memory Tip
1	Base apparent power	S_{BASE} or MVA_{BASE}	MVA	**S** for **Size** (apparent power)
2	Line-to-line base voltage	V_{BASE} or $kV_{L,Base}$	kV	**V** for **Voltage** (line-to-line)
3	Base current	I_{BASE}	A	**I** for **Current** (ammeter)
4	Base impedance	Z_{BASE}	Ω	**Z** for **Impedance** (looks like Z)

Common Formulas Using Base Quantities

Base current (3-phase system)

$$I_{BASE} = \frac{MVA_{BASE}}{\sqrt{3}kV_{L,Base}}$$

Base impedance

$$Z_{BASE} = \frac{kV_{L,Base}/\sqrt{3}}{I_{BASE}} = \frac{(kV_{L,Base})^2}{MVA_{BASE}}$$

Easy Way to Remember

S_{BASE} (MVA)	→	V_{BASE} (kV)	→	Calculate I_{BASE} (A)	→	Calculate Z_{BASE} (Ω)
Choose the system size		Use line-to-line voltage		Use I_{BASE} formula		Use Z_{BASE} formula

Key Takeaway

- **Per-unit value** = Actual value ÷ Base value (no unit).
- Need **four** base quantities: S_{BASE} (MVA), V_{BASE} (kV), I_{BASE} (A) and Z_{BASE} (Ω).
- Using per-unit system simplifies calculations and allows comparison across different voltage levels.

One Base Many Values Same System

EXAMPLE

IMPEDANCE PER-UNIT

The following examples provide step-by-step solutions to illustrate calculations in the per-unit system.

Example E5.1

Calculate the per-unit impedances of the power network shown in **Figure E5.1(a).**

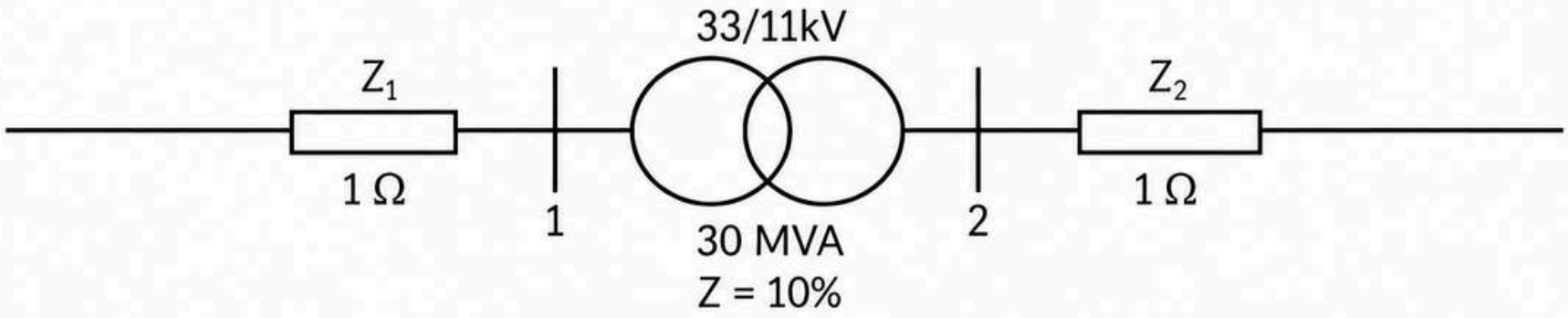

Figure E5.1(a): Simplified single-line diagram with transformer and impedances

SOLUTION — STEP-BY-STEP —

1 → 2 → 3 → 4 → 5

STEP 1: CALCULATE THE BASE IMPEDANCE, Z_{BASE}

Choose the system base

$$MVA_{Base} = 100 \text{ MVA}$$

(usually the value is used to make calculations easy when calculating the per-unit impedances)

It is common for both **primary** and **secondary** sides of the transformer.

Given

$$kV_{L1\ Base} = 33 \text{ kV}$$

$$kV_{L2\ Base} = 11 \text{ kV}$$

Base impedance formula

$$Z_{Base} = \frac{(kV_{L\,Base})^2}{MVA_{Base}}$$

Calculation

1 Base impedance at 33 kV (Primary side)

$$Z_{1\ Base} = \frac{(kV_{L1\ Base})^2}{MVA_{Base}} = \frac{(33)^2}{100} = \mathbf{10.89\ \Omega}$$

2 Base impedance at 11 kV (Secondary side)

$$Z_{2\ Base} = \frac{(kV_{L2\ Base})^2}{MVA_{Base}} = \frac{(11)^2}{100} = \mathbf{1.21\ \Omega}$$

SOLUTION
STEP-BY-STEP

1 → 2 → 3 → 4 → 5

STEP 2: CALCULATE THE PER-UNIT IMPEDANCE, Z_{pu} FOR Z_1 AND Z_2

Per-unit impedance formula:

$$Z_{pu} = \frac{Z_{actual}}{Z_{Base}}$$

Given:

$Z_1 = Z_{1\ actual} = 1\ \Omega, \quad Z_{1\ base} = 10.89\ \Omega$ ***(from Step 1)***

$Z_2 = Z_{2\ actual} = 1\ \Omega, \quad Z_{2\ base} = 1.21\ \Omega$ ***(from Step 1)***

Calculation:

1 Per-unit impedance for Z_1

$$Z_{1\,pu} = \frac{Z_{1\ actual}}{Z_{1\ base}} = \frac{1}{10.89}$$

$$Z_{1\,pu} = 0.0918\ pu$$

2 Per-unit impedance for Z_2

$$Z_{2\,pu} = \frac{Z_{2\ actual}}{Z_{2\ base}} = \frac{1}{1.21}$$

$$Z_{2\,pu} = 0.8264\ pu$$

SOLUTION
— STEP-BY-STEP —

1 → 2 → 3 → 4 → 5

STEP 3: CALCULATE THE ACTUAL IMPEDANCE OF THE TRANSFORMER

The transformer per-unit impedance can be calculated using **two methods.**

Method 1: Calculate the **actual impedance** on both the **primary** and **secondary** sides of the transformer.

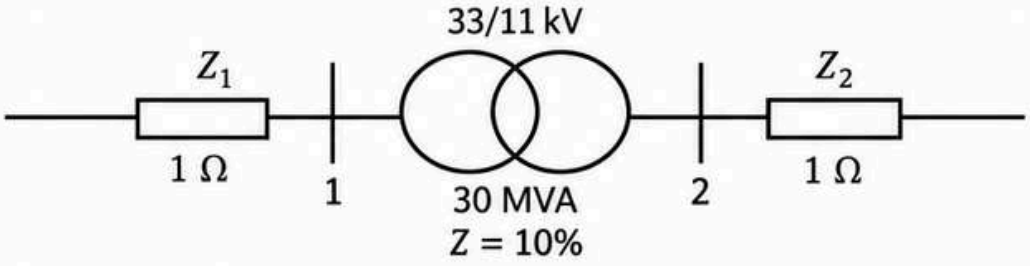

Transformer actual impedance formula:

$$Z_{actual} = \frac{\%Z}{100} \; x \; \frac{(kV_L)^2}{MVA_{TX}}$$

Where:

- $\%Z$ = percentage impedance of transformer
- kV_L = line-to-line voltage of the transformer side (kV)
- MVA_{TX} = rated apparent power of the transformer (MVA)

Calculation:

1 Primary side (33 kV)

$$Z_{primary\ actual} = \frac{10}{100} \; x \; \frac{(33\ kV)^2}{30\ MVA} = 3.63\ \Omega$$

$$Z_{primary\ actual} = \mathbf{3.63\ \Omega}$$

2 Secondary side (11 kV)

$$Z_{secondary\ actual} = \frac{10}{100} \; x \; \frac{(11\ kV)^2}{30 MVA} = 0.4033\ \Omega$$

$$Z_{secondary\ actual} = \mathbf{0.4033\ \Omega}$$

SOLUTION — STEP-BY-STEP —

1 → 2 → 3 → 4 → 5

STEP 4: CALCULATE THE PER-UNIT IMPEDANCE OF THE TRANSFORMER

Per-unit impedance formula:

$$Z_{pu} = \frac{Z_{actual}}{Z_{Base}}$$

Given:

$Z_{1\ Base} = 10.89\ \Omega$ **(from Step 1)** $Z_{primary\ actual} = 3.63\ \Omega$ **(from Step 3)**

$Z_{2\ Base} = 1.21\ \Omega$ **(from Step 1)** $Z_{secondary\ actual} = 0.4033\ \Omega$ **(from Step 3)**

Calculation:

1 Using the primary side

$$Z_{primary\ pu} = \frac{Z_{primary\ actual}}{Z_{1\ Base}} = \frac{3.63}{10.89}$$

$$Z_{primary\ pu} = 0.3333\ pu$$

2 Using the secondary side

$$Z_{secondary\ pu} = \frac{Z_{secondary\ actual}}{Z_{2\ Base}} = \frac{0.4033}{1.21}$$

$$Z_{secondary\ pu} = 0.3333\ pu$$

$$Z_{T\ pu} = Z_{primary\ pu} = Z_{secondary\ pu} = 0.3333\ pu$$

Only one side, either primary or secondary, is required to calculate the transformer per-unit impedance, $Z_{T\ pu}$.

SOLUTION
— STEP-BY-STEP —

1 → 2 → ~~3~~ → 4 → 5

STEP 4: CALCULATE THE PER-UNIT IMPEDANCE OF THE TRANSFORMER
(Method 2)

A simpler and more convenient method —
Step 3 is not required.

Per-unit impedance formula:

$$Z_{T\,pu} = \frac{\%Z}{100} \times \frac{MVA_{Base}}{MVA_{Tx}}$$

Given:

$$MVA_{Base} = 100\ MVA$$
$$MVA_{Tx} = 30\ MVA$$
$$\%Z = 10\%$$

Calculation:

$$Z_{T\,pu} = \frac{10}{100} \times \frac{100\,M}{30\,M} = 0.3333\ pu$$

$$\boldsymbol{Z_{T\,pu} = 0.3333\ pu}$$

SOLUTION
— STEP-BY-STEP —

1 → 2 → 3 → 4 → 5

STEP 5: DRAW THE EQUIVALENT PER-UNIT IMPEDANCE DIAGRAM

Using the per-unit impedances calculated in the previous steps, the equivalent per-unit impedance diagram is shown in **Figure E5.1(b).**

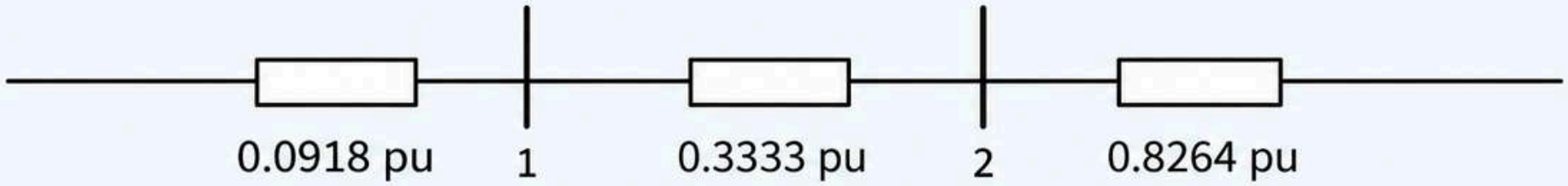

Figure E5.1(b) Equivalent per-unit impedance diagram

EXAMPLE

IMPEDANCE PER-UNIT

Example E5.2

Calculate the actual fault current and fault level in a system during fault. Consider the fault condition as shown in **Figure E5.2(a).**

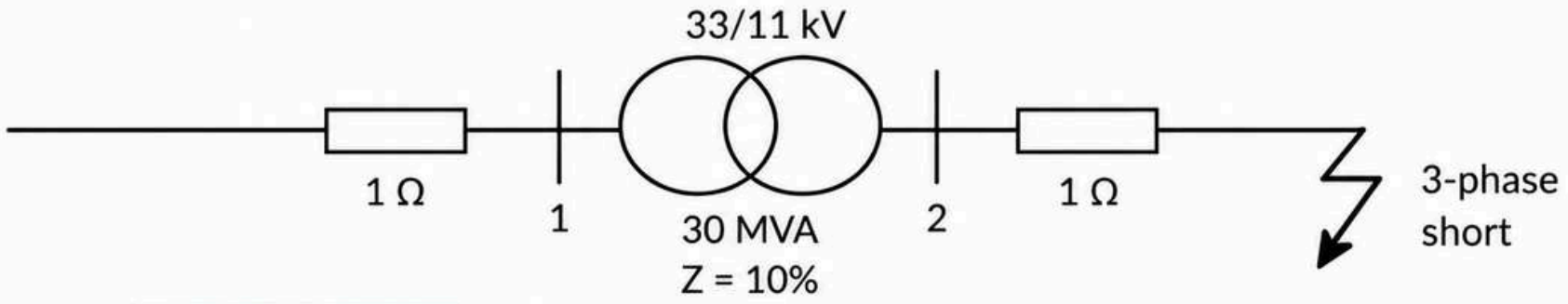

Figure E5.2(a) Simplified single-line diagram during fault condition

Example E5.1(a) is extended to determine the actual fault current and fault level during a fault, as shown in **Figure E5.2(a).** Before proceeding to the following steps, complete **Steps 1 to 5** from **Example E5.1(a).**

Note: Complete **Steps 1 to 5** from **Example E5.1(a) first** before continuing with the next steps to calculate the actual fault current and fault level.

SOLUTION
- STEP-BY-STEP -

1 → 2 → 3 → 4 → 5 → 6

STEP 1

Draw the per-unit impedance diagram during fault condition.

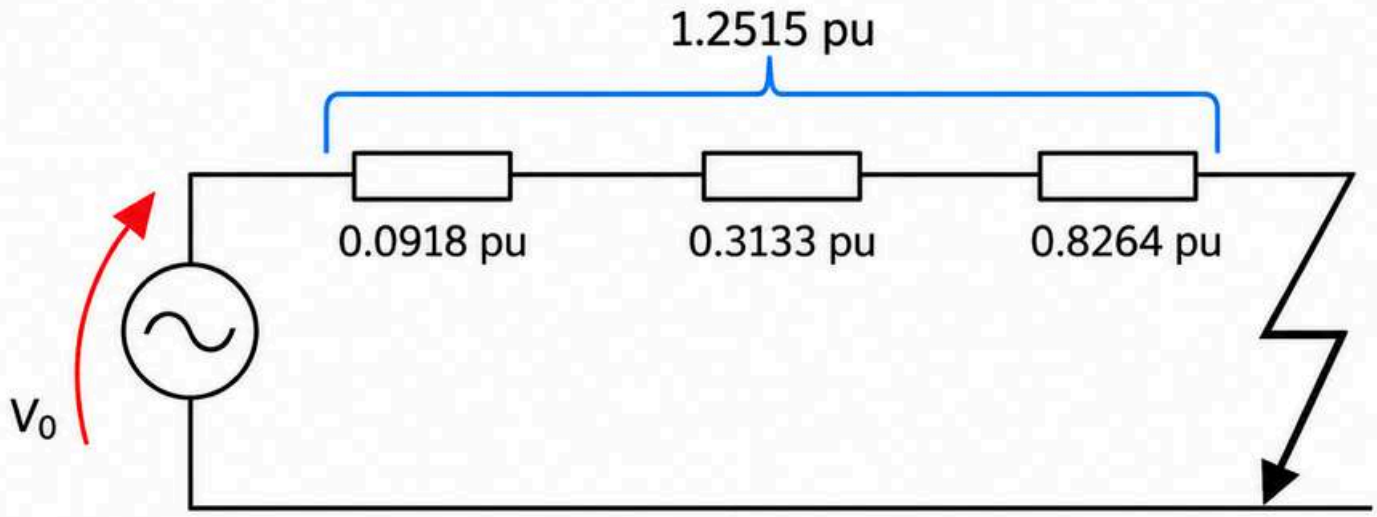

Figure E5.2(b) Per-unit impedance diagram during fault condition

SOLUTION
- STEP-BY-STEP -

1 → 2 → 3 → 4 → 5 → 6

STEP 2

Draw the simplified equivalent per-unit impedance diagram.

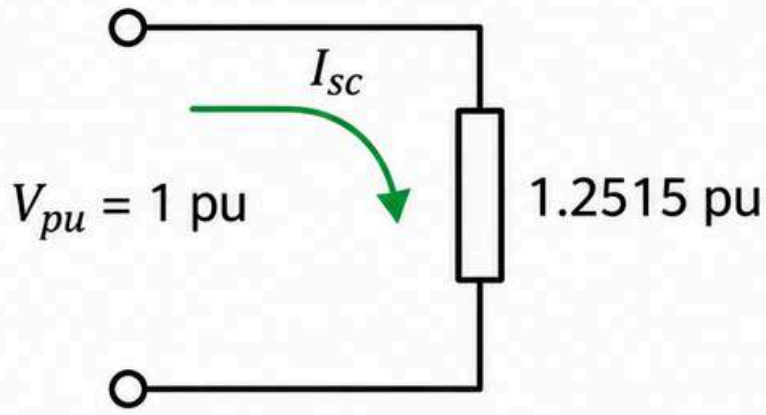

For all cases, the per-unit voltage = 1 pu because the base voltage is taken to be the same as the actual voltage.

$$V_{pu} = V_{actual}/V_{base}$$

Figure E5.2(c) The simplified equivalent per-unit impedance diagram

SOLUTION
- STEP-BY-STEP -

1 → 2 → 3 → 4 → 5 → 6

STEP 3

Calculate the per-unit current, I_{pu}.

By manipulating Ohm's Law formula,

$$V = IR$$

Given:

$$Z_{pu} = 1.2515\ pu\ (\textbf{Step 1})$$
$$V_{pu} = 1\ pu\ (\textbf{Step 2})$$

Therefore,

$$I_{pu} = \frac{V_{pu}}{Z_{pu}} = \frac{1}{1.2515} = 0.7990\ pu$$

SOLUTION
- STEP-BY-STEP -

1 → 2 → 3 → **4** → 5 → 6

STEP 4

Calculate the base current, I_{base}.

By using the base current formula:

$$I_{base} = \frac{MVA_{Base}}{\sqrt{3}\,kV_{LBase}}$$

Given:

$$MVA_{Base} = 100\,MVA$$

$$kV_{LBase} = 11\,kV\,(fault\ occur\ at\ secondary\ side)$$

Hence,

$$I_{base} = \frac{100\,M}{\sqrt{3} \times 11\,k} = 5248\,A$$

SOLUTION
- STEP-BY-STEP -

1 → 2 → 3 → 4 → **5** → 6

STEP 5

Calculate the actual fault current, I_{actual}.

By manipulating quantity in p.u formula:

$$Quantity\ in\ p.u = \frac{actual\ quantity\ value}{base\ quantity\ value}$$

Given:

$$I_{pu} = 0.7990\ pu\ (\textbf{Step 3})$$

$$I_{Base} = 5248\ A\ (\textbf{Step 4})$$

Therefore,

$$I_{actual} = I_f = I_{pu} \times I_{Base}$$

$$I_{actual} = I_f = 0.7990 \times 5248 = 4193\ A$$

SOLUTION
- STEP-BY-STEP -

1 → 2 → 3 → 4 → 5 → 6

STEP 6

Calculate the fault level, MVA_{fault}.

By using the MVA_{fault} formula:

$$\boldsymbol{MVA_{fault} = \sqrt{3} \times I_f \times kV_{LBase}}$$

Given:

$$I_f = 4193\ A\ (\textbf{Step 5})$$

$$kV_{LBase} = 11\ kV\ (fault\ occur\ at\ secondary\ side)$$

Hence,

$$MVA_{fault} = \sqrt{3} \times 4193 \times 11 = 79.8874\ MVA$$

EXAMPLE

IMPEDANCE PER-UNIT

Example E5.3 A power network is shown in Figure E5.3(a). Using the per-unit system, calculate the fault current at the Low Voltage (LV) side of the system.

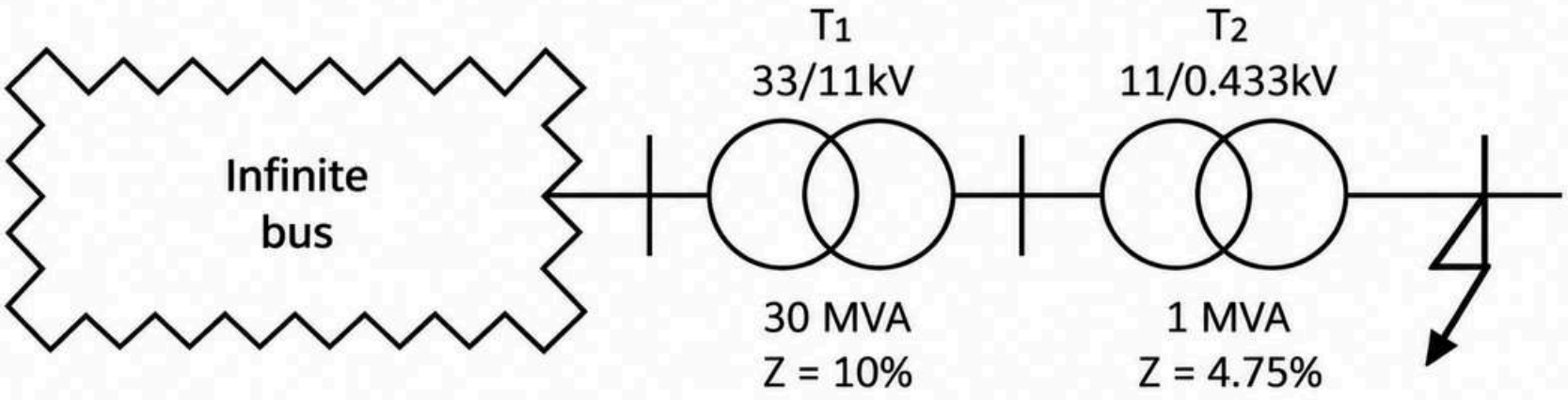

Figure E5.3(a): Simplified single-line diagram with transformers

SOLUTION
— STEP-BY-STEP —

1 → 2 → 3 → 4 → 5 → 6

STEP 1: CALCULATE THE PER-UNIT IMPEDANCES OF TRANSFORMERS

Choose the system base

$$MVA_{Base} = 100 \text{ MVA}$$

The base voltages are selected to be the same as the line voltages.

It is common for both **primary** and **secondary** sides of the transformer.

Given

	T1	T2
MVA_{Base}	100 MVA	100 MVA
MVA_{Tx}	30 MVA	1 MVA
$\%Z$	10%	4.75%

Formula

$$Z_{T\,pu} = \frac{\%Z}{100} \times \frac{MVA_{Base}}{MVA_{Tx}}$$

Calculation

1 Per-unit impedance of T1 (33/11 kV, 30 MVA, Z = 10%)

$$Z_{T1\,pu} = \frac{10}{100} \times \frac{100M}{30M} = 0.3333\ pu$$

0.3333 pu

2 Per-unit impedance of T2 (11/0.433 kV, 1 MVA, Z = 4.75%)

$$Z_{T2\,pu} = \frac{4.75}{100} \times \frac{100M}{1M} = 4.75\ pu$$

4.75 pu

SOLUTION
— STEP-BY-STEP —

1 → 2 → 3 → 4 → 5 → 6

STEP 2: DRAW THE PER-UNIT IMPEDANCE DIAGRAM DURING FAULT CONDITION

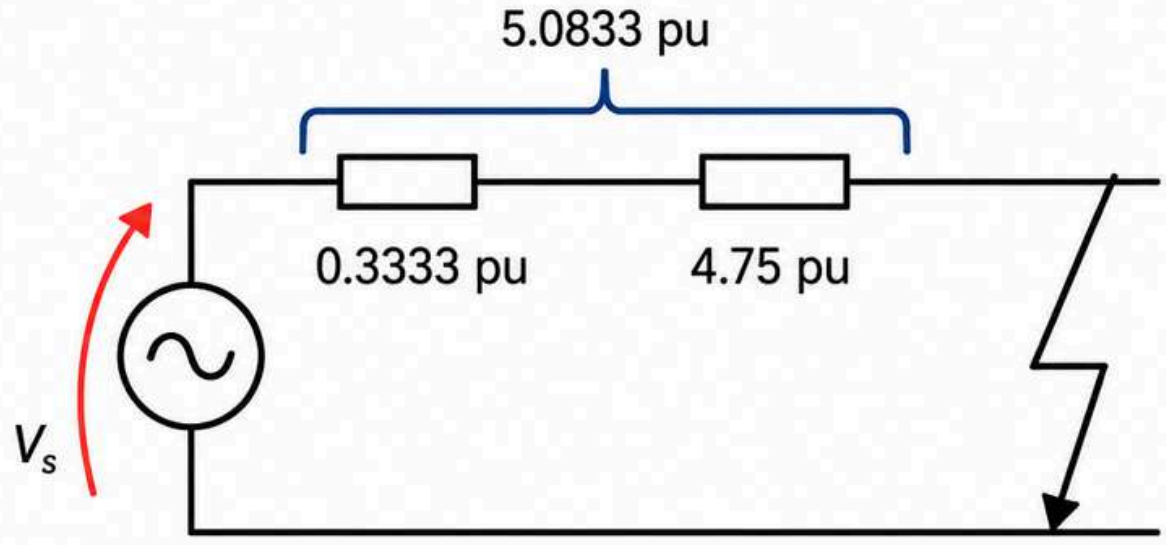

Figure E5.3(b): Per-unit impedance diagram during fault condition

SOLUTION
— STEP-BY-STEP —

1 → 2 → 3 → 4 → 5 → 6

STEP 3: DRAW THE SIMPLIFIED EQUIVALENT PER-UNIT IMPEDANCE DIAGRAM

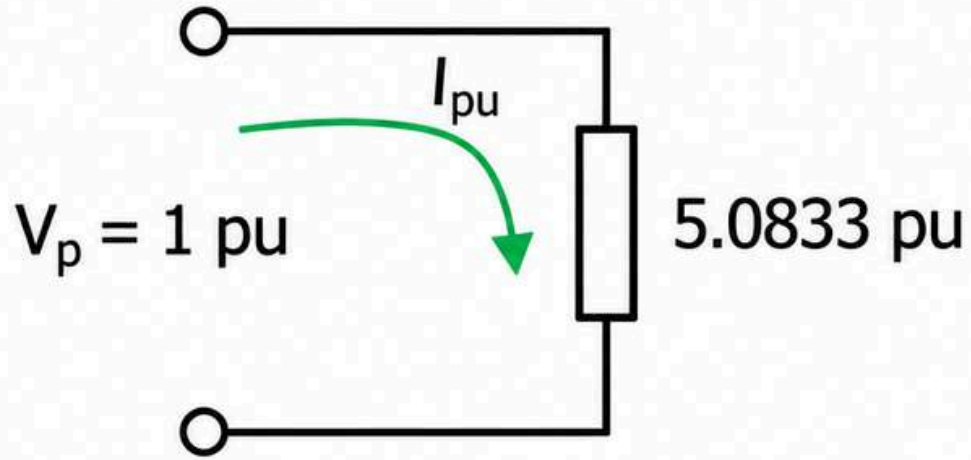

Figure E5.3(c): The simplified equivalent per-unit impedance diagram

SOLUTION — STEP-BY-STEP —

1 → 2 → 3 → **4** → 5 → 6

STEP 4: RECALL SOLUTION OF EXAMPLE E5.2 FOR STEP 3 TO CALCULATE THE PER- UNIT FAULT CURRENT, I_{pu}

Given

$$Z_{pu} = 5.0833\ pu \quad \textit{(Step 2)}$$

$$V_{pu} = 1\ pu \quad \textit{(Step 3)}$$

Calculation

Therefore,

$$I_{pu} = \frac{V_{pu}}{Z_{pu}} = \frac{1}{5.0833} = \boxed{\mathbf{0.1967\ pu}}$$

SOLUTION
— STEP-BY-STEP —

1 → 2 → 3 → 4 → 5 → 6

STEP 5: RECALL SOLUTION OF EXAMPLE E5.2 FOR STEP 4 TO CALCULATE THE BASE CURRENT, I_{Base} AT 0.433 kV LINE

Given

$$MVA_{Base} = 100 \text{ MVA}$$

$$kV_{LBase} = 0.433\ kV \ (\textit{fault occur at secondary side})$$

Calculation

Hence,

$$I_{Base} = \frac{100\ M}{\sqrt{3}\ \text{x}\ 0.433\ k} = \boxed{133.3372\ kA}$$

SOLUTION
— STEP-BY-STEP —

1 → 2 → 3 → 4 → 5 → 6

STEP 6: RECALL SOLUTION OF EXAMPLE E5.2 FOR STEP 5 TO CALCULATE THE FAULT CURRENT, I_f AT 0.433 kV LINE

Given

$$I_{pu} = 0.1967\ pu\ \ (\textbf{\textit{Step 4}})$$

$$I_{Base} = 133.3372\ kA\ \ (\textbf{\textit{Step 5}})$$

Calculation

Therefore,

$$I_{actual} = I_f = I_{pu} \times I_{Base}$$

$$I_{actual} = I_f = 0.1967 \times 133.3372\ k = \textbf{26.2274 kA}$$

INTERACTIVE PAGE

PROBLEMS P5.1

Solve the following problems.

(a) Simplify the network shown in **Figure 5.1(a)** to obtain an equivalent per-unit impedance diagram.

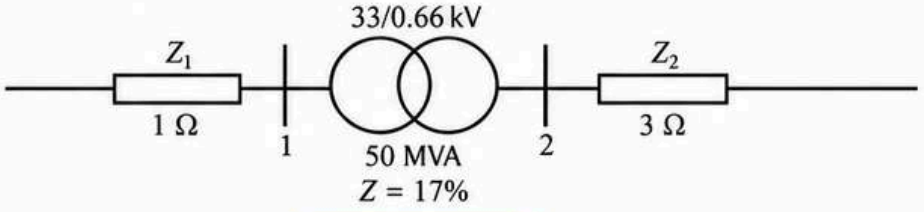

Figure 5.1(a)

(b) Simplify the equivalent per-unit impedance diagram shown in **Figure 5.1(b)** and derive the expression for the per-unit fault current, $I_{f,pu}$.

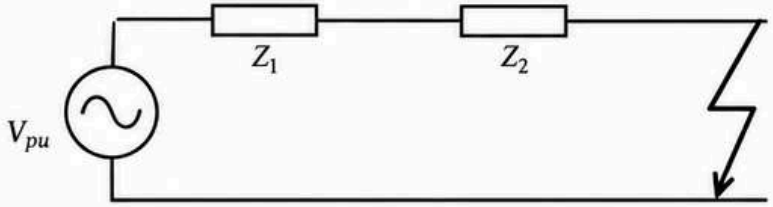

Figure 5.1(b)

(c) Calculate the actual fault current and the fault level for the fault condition shown in **Figure 5.1(c)**.

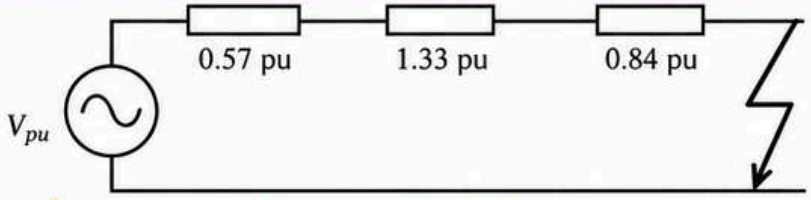

Figure 5.1(c)

Try It Yourself First, Then Check the Solution!

SOLUTION

PER-UNIT VALUE FORMULA IN SOLVING SYMMETRICAL FAULT PROBLEM

Simple Method Reliable Result



FAULT ANALYSIS FOR A SAFER POWER SYSTEM

- In power distribution, there are a few **common types of electrical fault** such as the **single line to ground (LG), double line fault and 3-phase fault.**
- When earth-fault occurs, the fault current return to the star point through a **return path** that can be neutral wires, ground connection, cable sheath, shield wires and earth mass.
- **3-phase fault current calculation** involves **simpler computation.** Hence, it is easier to calculate the 3-phase fault current and **relates it to LG and double line fault currents.**
- By using the **per-unit value formula** allows the power network consisting of components functioning at different voltage levels to be reduced to a system of equivalent impedances that **simplifies the calculation.**

Common Faults in Power Distribution



Single line-to-ground (LG)

One phase is connected to ground.



Double line fault (LL)

Two phases are short-circuited to each other.



Three-phase fault (LLL)

All three phases are short-circuited to each other.

Fault Current Return Path for Earth Fault

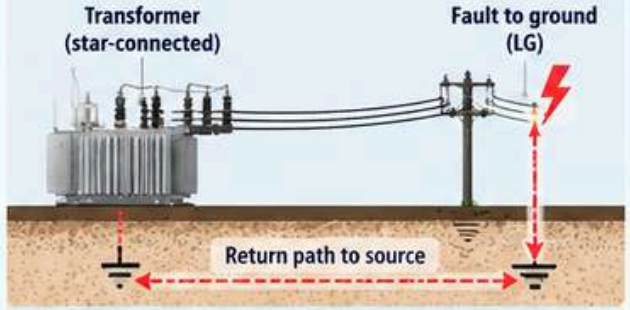

Fault current returns to the star point through **neutral wires, ground connection, cable sheath,** shield wires and earth mass.

Advantages of Using Per-Unit System

- **Simplifies calculation**
  3-phase fault current involves simpler computation.
- **Common base for different voltage levels**
  Components at different voltage levels can be represented using a single base.
- **Easier comparison**
  Allows easy comparison of fault levels and equipment ratings.
- **Relates to other faults**
  3-phase fault current can be used as a reference to determine LG and double line fault currents.

Key Formula (Per-Unit Value)

$$\text{Quantity in p.u.} = \frac{\text{actual quantity value}}{\text{base quantity value}}$$

- **Actual value in ohm, kV, A or MVA**
- **Complex number** (may be real or imaginary)
- **Real number** (base value)

Application in Symmetrical Fault (3-Phase Fault)

1. Convert all system components to per-unit values using common base quantities (S_{BASE}, V_{BASE}, I_{BASE} and Z_{BASE}).
2. Reduce the network to an equivalent per-unit impedance at the fault point.
3. Calculate the 3-phase fault current in per-unit, then convert to actual value if required.
4. The 3-phase fault current can then be used to relate to LG and double line fault currents.

One Base Many Components Simpler Fault Calculation

KEY TAKEAWAY

Using per-unit value formula simplifies fault analysis, allows a common base for multi-voltage systems, and makes the calculation of symmetrical (3-phase) fault current easier.

Understand Today For a Safer Tomorrow

THE RIGHT STEPS FOR SELECTION OF BASE MVA AND BASE VOLTAGE

The examples are explained using a step-by-step approach to guide students towards a clear understanding.

Example E5.4

A power network is shown in **Figure E5.4(a).** Draw the per-unit impedance diagram and calculate per-unit value for all components.

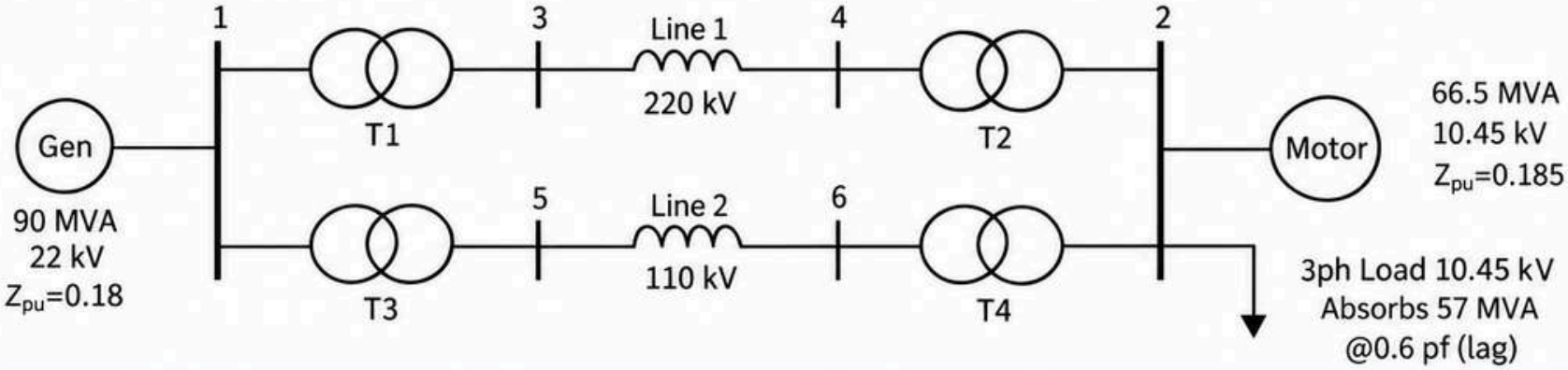

T1:	50 MVA	22/220 kV	Z_{pu} = 0.10
T2:	40 MVA	220/11 kV	Z_{pu} = 0.06
T3:	40 MVA	22/110 kV	Z_{pu} = 0.064
T4:	40 MVA	110/11 kV	Z_{pu} = 0.08

Line 1:	48.4 Ω (total)
Line 2:	65.43 Ω (total)

Figure E5.4(a): Single diagram with various components

INTERACTIVE PAGE

INTERACTIVE NAVIGATION GUIDE

This interactive navigation guide helps you to easily access specific steps or components in the solution. Click on the buttons to jump to the corresponding page.

STEP NAVIGATION

CLICK ON A STEP NUMBER TO JUMP DIRECTLY TO THE CORRESPONDING SOLUTION PAGE.

1. **STEP 1:** DRAW THE EQUIVALENT PER-UNIT DIAGRAM
2. **STEP 2:** ASSUME A SYSTEM BASE
3. **STEP 3:** IDENTIFY THE VOLTAGE BASE, V_{Base}
4. **STEP 4:** CALCULATE THE PER-UNIT IMPEDANCE OF EACH COMPONENT
5. **STEP 5:** DRAW THE EQUIVALENT DIAGRAM WITH ALL THE IMPEDANCES VALUE

COMPONENT NAVIGATION

CLICK ON A COMPONENT TO VIEW ITS CORRESPONDING PER-UNIT IMPEDANCE CALCULATION.

Example (Click to view)



Click on the component label (e.g. **COMPONENT 1**) to jump to the page of its corresponding per-unit impedance calculation.

RETURN TO MAIN SOLUTION

CLICK THE HOME ICON TO RETURN TO THE MAIN SOLUTION PAGE.

INTERACTIVE PAGE

SOLUTION
— STEP-BY-STEP —

1 → 2 → 3 → 4 → 5

THE EQUIVALENT PER-UNIT DIAGRAM

Based on **Example E5.4,** the equivalent per-unit impedance diagram for **Step 1** is shown in **Figure E5.4(b).**

STEP 1 DRAW THE EQUIVALENT PER-UNIT DIAGRAM.

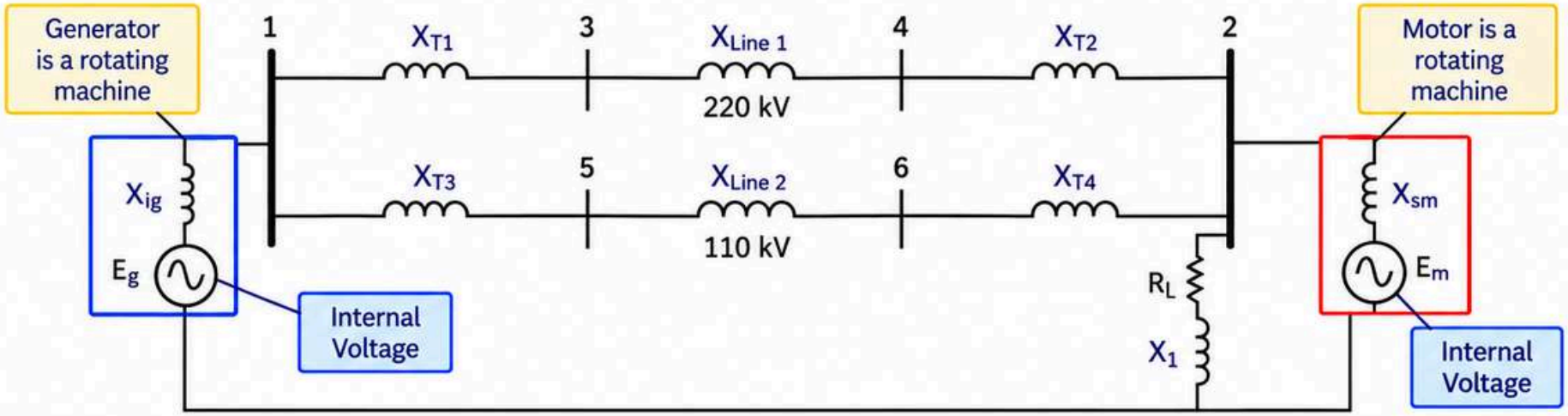

Figure E5.4(b): The equivalent per-unit diagram

CONDITIONS

To draw the equivalent per-unit diagram, **three conditions must be considered:**

1. Resistive impedance for most components have been ignored.
2. Rotating machines have been replaced with a voltage source behind their internal reactance.
3. Capacitive effects between lines and to ground are ignored as well.

INTERACTIVE PAGE

SOLUTION
— STEP-BY-STEP —

1 → 2 → 3 → 4 → 5

CALCULATE THE PER-UNIT IMPEDANCE OF ALL COMPONENTS

STEP 2 ASSUME A SYSTEM BASE

$$MVA_{Base} = 100\ MVA$$

The **base value** is chosen to make per-unit impedance calculations easier.

STEP 3 IDENTIFY THE VOLTAGE BASE, V_{Base}

The voltage base in the system is determined by the **transformer.**

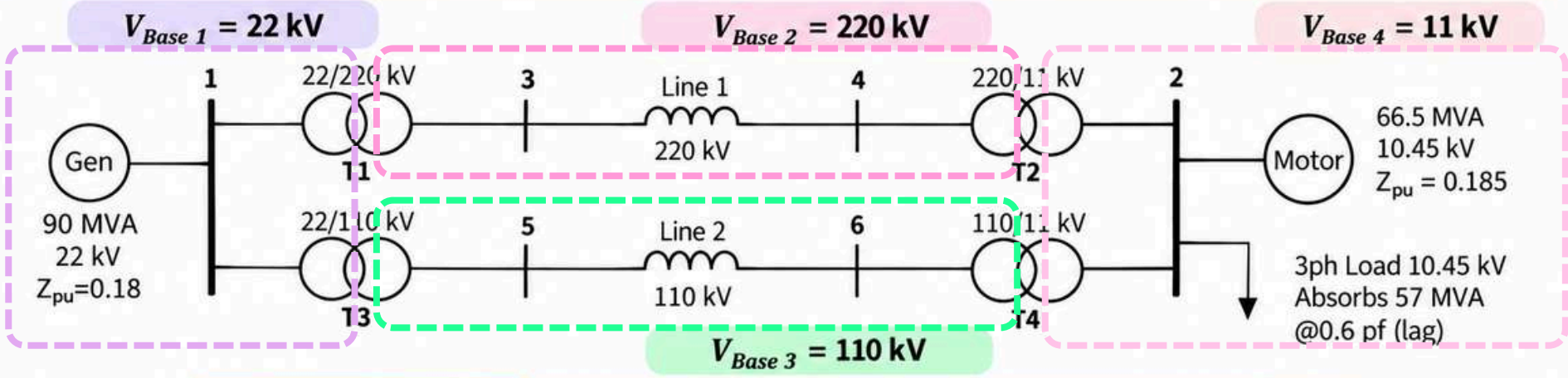

Figure E5.4(c): Four voltage base is determined in the system.

INTERACTIVE PAGE

SOLUTION
STEP-BY-STEP

1 → 2 → 3 → 4 → 5

CALCULATE THE PER-UNIT IMPEDANCE OF ALL COMPONENTS

STEP 4 CALCULATE THE PER-UNIT IMPEDANCE OF EACH COMPONENT

Calculate the per-unit impedance of each component in the **sequence indicated by the numbered labels** in the **Figure E5.4(d).**

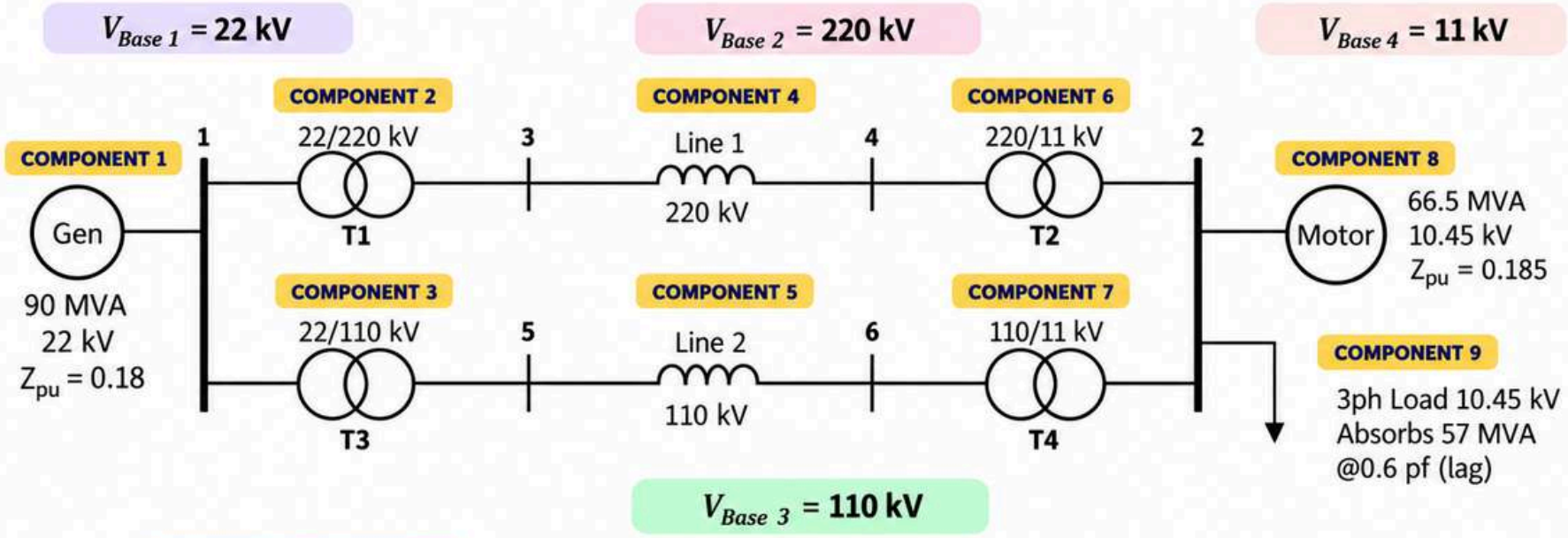

Figure E5.4(d): Power system with numbered components for per-unit impedance calculation.

INTERACTIVE PAGE

SOLUTION
— STEP-BY-STEP —

1 → 2 → 3 → 4 → 5

CALCULATE THE PER-UNIT IMPEDANCE OF ALL COMPONENTS

STEP 4 CALCULATE THE PER-UNIT IMPEDANCE OF EACH COMPONENT

COMPONENT 1: GENERATOR (ROTATING MACHINE)

1 By using the formula:

$$Z_{pu\ new} = Z_{pu\ old}\left(\frac{MVA_{Base\ new}}{MVA_{Base\ old}}\right) \text{x} \left(\frac{kV_{L\ Base\ old}}{kV_{L\ Base\ new}}\right)^2$$

2 Given:

$Z_{pu\ old} = 0.18\ pu$ | $MVA_{Base\ old} = 90$ MVA | $kV_{L\ Base\ old} = 22$ kV *(Figure E5.4(d))*

$MVA_{Base\ new} = \mathbf{100\ MVA}$ | $kV_{L\ Base\ new} = V_{Base\ 1} = 22$ kV *(Step 3)*

3 Therefore,

$$X_{pu\ sg} = 0.18\left(\frac{100}{90}\right)\left(\frac{22}{22}\right)^2 = \mathbf{0.20\ pu}$$

BACK TO STEP 4

INTERACTIVE PAGE

SOLUTION — STEP-BY-STEP —

1 → 2 → 3 → 4 → 5

CALCULATE THE PER-UNIT IMPEDANCE OF ALL COMPONENTS

STEP 4 CALCULATE THE PER-UNIT IMPEDANCE OF EACH COMPONENT

COMPONENT 2: TRANSFORMER T1

1 By using the formula:

$$Z_{pu\ new} = Z_{pu\ old}\left(\frac{MVA_{Base\ new}}{MVA_{Base\ old}}\right) \times \left(\frac{kV_{L\ Base\ old}}{kV_{L\ Base\ new}}\right)^2$$

2 Given:

$Z_{pu\ old} = 0.1\ pu$ | $MVA_{Base\ old} = 50$ MVA | $kV_{L\ Base\ old} = 22$ kV *(Figure E5.4(a))*

$MVA_{Base\ new} = \mathbf{100\ MVA}$ | $kV_{L\ Base\ new} = V_{Base\ 1} = 22$ kV *(Step 3)*

3 Therefore,

$$X_{pu\ T1} = 0.1\left(\frac{100M}{50M}\right)\left(\frac{22k}{22k}\right)^2 = \mathbf{0.20\ pu}$$

BACK TO STEP 4

INTERACTIVE PAGE

SOLUTION — STEP-BY-STEP —

1 → 2 → 3 → 4 → 5

CALCULATE THE PER-UNIT IMPEDANCE OF ALL COMPONENTS

STEP 4 CALCULATE THE PER-UNIT IMPEDANCE OF EACH COMPONENT

COMPONENT 3: TRANSFORMER T3

1 By using the formula:

$$Z_{pu\ new} = Z_{pu\ old}\left(\frac{MVA_{Base\ new}}{MVA_{Base\ old}}\right) \text{x} \left(\frac{kV_{L\ Base\ old}}{kV_{L\ Base\ new}}\right)^2$$

2 Given:

$Z_{pu\ old} = 0.064\ pu$ | $MVA_{Base\ old} = 40$ MVA | $kV_{L\ Base\ old} = 22$ kV *(Figure E5.4(a))*

$MVA_{Base\ new} = \mathbf{100\ MVA}$ | $kV_{L\ Base\ new} = V_{Base\ 1} = 22$ kV *(Step 3)*

3 Therefore,

$$X_{pu\ T3} = 0.064\left(\frac{100M}{40M}\right)\left(\frac{22k}{22k}\right)^2 = \boxed{0.16\ pu}$$

INTERACTIVE PAGE

SOLUTION — STEP-BY-STEP —

1 → 2 → 3 → **4** → 5

CALCULATE THE PER-UNIT IMPEDANCE OF ALL COMPONENTS

STEP 4 CALCULATE THE PER-UNIT IMPEDANCE OF EACH COMPONENT

COMPONENT 4: TRANSMISSION LINE 1

1 By using the formula:

$$Z_{Base} = \frac{(kV_{LBase})^2}{MVA_{Base}}$$

2 Given:

Line 1: | $kV_{LBase} = V_{Base\ 2} = 220\ kV$ ***(Step 3)***

Therefore,

$$Z_{Line\ 1\ Base} = \frac{(220k)^2}{100M} = 484\ \Omega$$

3 By using the formula:

$$Z_{pu} = \frac{Z_{actual}}{Z_{Base}}$$

4 Given:

Line 1: | $Z_{Line\ 1\ actual} = 48.4\ \Omega$ ***(Figure E5.4(a))***

5 Hence,

$$X_{Line\ 1\ pu} = \frac{48.4}{484} = \textbf{0.1 pu}$$

BACK TO STEP 4

INTERACTIVE PAGE

SOLUTION — STEP-BY-STEP —

1 → 2 → 3 → 4 → 5

CALCULATE THE PER-UNIT IMPEDANCE OF ALL COMPONENTS

STEP 4 CALCULATE THE PER-UNIT IMPEDANCE OF EACH COMPONENT

COMPONENT 5: TRANSMISSION LINE 2

1 By using the formula:

$$Z_{Base} = \frac{(kV_{LBase})^2}{MVA_{Base}}$$

2 Given:

Line 2: $kV_{LBase} = V_{Base\,3} = 110\ kV$ ***(Step 3)***

Therefore,

$$Z_{Line\ 2\ Base} = \frac{(110k)^2}{100M} = 121\ \Omega$$

3 By using the formula:

$$Z_{pu} = \frac{Z_{actual}}{Z_{Base}}$$

4 Given:

Line 2: $Z_{Line\ 2\ actual} = 65.43\ \Omega$ ***(Figure E5.4(a))***

5 Hence,

$$X_{Line\ 2\ pu} = \frac{65.43}{121} = \mathbf{0.5407\ pu}$$

BACK TO STEP 4

INTERACTIVE PAGE

SOLUTION — STEP-BY-STEP —

1 → 2 → 3 → 4 → 5

CALCULATE THE PER-UNIT IMPEDANCE OF ALL COMPONENTS

STEP 4 CALCULATE THE PER-UNIT IMPEDANCE OF EACH COMPONENT

COMPONENT 6: TRANSFORMER T2

1 By using the formula:

$$Z_{pu\ new} = Z_{pu\ old}\left(\frac{MVA_{Base\ new}}{MVA_{Base\ old}}\right) \text{x} \left(\frac{kV_{L\ Base\ old}}{kV_{L\ Base\ new}}\right)^2$$

2 Given:

$Z_{pu\ old} = 0.06\ pu$ | $MVA_{Base\ old} = 40$ MVA | $kV_{L\ Base\ old} = 22\ kV$ ***(Figure E5.4(a))***

$MVA_{Base\ new} = \mathbf{100\ MVA}$ | $kV_{L\ Base\ new} = V_{Base\ 2} = 220$ kV ***(Step 3)***

3 Therefore,

$$X_{pu\ T2} = 0.06\left(\frac{100M}{40M}\right)\left(\frac{220k}{220k}\right)^2 = \boxed{0.15\ pu}$$

BACK TO STEP 4

INTERACTIVE PAGE

SOLUTION — STEP-BY-STEP —

1 → 2 → 3 → 4 → 5

CALCULATE THE PER-UNIT IMPEDANCE OF ALL COMPONENTS

STEP 4 CALCULATE THE PER-UNIT IMPEDANCE OF EACH COMPONENT

COMPONENT 7: TRANSFORMER T4

1 By using the formula:

$$Z_{pu\ new} = Z_{pu\ old}\left(\frac{MVA_{Base\ new}}{MVA_{Base\ old}}\right) \text{x} \left(\frac{kV_{L\ Base\ old}}{kV_{L\ Base\ new}}\right)^2$$

2 Given:

$Z_{pu\ old} = 0.08\ pu$ | $MVA_{Base\ old} = 40$ MVA | $kV_{L\ Base\ old} = 110\ kV$ ***(Figure E5.4(a))***

$MVA_{Base\ new} = \mathbf{100\ MVA}$ | $kV_{L\ Base\ new} = V_{Base\ 3} = 110$ kV ***(Step 3)***

3 Therefore,

$$X_{pu\ T4} = 0.08\left(\frac{100M}{40M}\right)\left(\frac{110k}{110k}\right)^2 = \boxed{0.20\ pu}$$

BACK TO STEP 4

INTERACTIVE PAGE

SOLUTION — STEP-BY-STEP —

1 → 2 → 3 → 4 → 5

CALCULATE THE PER-UNIT IMPEDANCE OF ALL COMPONENTS

STEP 4 CALCULATE THE PER-UNIT IMPEDANCE OF EACH COMPONENT

COMPONENT 8: MOTOR (ROTATING MACHINE)

1 By using the formula:

$$Z_{pu\ new} = Z_{pu\ old}\left(\frac{MVA_{Base\ new}}{MVA_{Base\ old}}\right) \text{x} \left(\frac{kV_{L\ Base\ old}}{kV_{L\ Base\ new}}\right)^2$$

2 Given:

$Z_{pu\ old} = 0.18\ pu$ | $MVA_{Base\ old} = 66.5\ \text{MVA}$ | $kV_{L\ Base\ old} = 10.45\ \text{kV}$ ***(Figure E5.4(d))***

$MVA_{Base\ new} = \mathbf{100\ MVA}$ | $kV_{L\ Base\ new} = V_{Base\ 1} = 11\ \text{kV}$ ***(Step 3)***

3 Therefore,

$$X_{pu\ sm} = 0.185\left(\frac{100M}{66.5M}\right)\left(\frac{10.45k}{11k}\right)^2 = \boxed{\mathbf{0.2511\ pu}}$$

BACK TO STEP 4

INTERACTIVE PAGE

SOLUTION — STEP-BY-STEP —

1 → 2 → 3 → 4 → 5

CALCULATE THE PER-UNIT IMPEDANCE OF ALL COMPONENTS

STEP 4 CALCULATE THE PER-UNIT IMPEDANCE OF EACH COMPONENT

COMPONENT 9: 3 PHASE LOAD

1 Calculate base impedance:

Given:

$$kV_{LBase} = V_{Base\ 4} = 11\ kV \quad (\textbf{Step 3})$$

By using the formula:

$$Z_{Base} = \frac{(kV_{LBase})^2}{MVA_{Base}}$$

Therefore,

$$Z_{3\ Phase\ load\ Base} = \frac{(11k)^2}{100M} = 1.21\ \Omega$$

2 Determine load power in complex form:

Given: $Power\ factor, \cos\theta = 0.6\ (lag)$ | $V_{rated} = 10.45\ kV$ | $S_{3\phi}(Load) = 57\ MVA \angle \theta$ *(Figure E5.4(a))*

Therefore, $\theta = cos^{-1}(0.6) = 53.13°$

Thus, $S_{3\phi}(Load) = 57\ MVA \angle -53.13°$

3 Calculate actual load impedance:

By using the formula:

$$Z_{3\ phase\ load\ actual} = \frac{(V_{rated})^2}{S_{3\phi}(Load)}$$

Therefore,

$$Z_{3\ phase\ load\ actual} = \frac{(10.45k)^2}{57MVA \angle -53.13°}$$

$$= \frac{(10.45k)^2}{(34.2 - j45.6)M} = 1.1495 + j1.5327\ \Omega$$

4 Convert to per-unit:

Hence,

$$Z_{3\ phase\ load\ pu} = \frac{1.1495 + j1.5327}{1.21} = \textbf{0.95 + j1.2667 pu}$$

BACK TO STEP 4

INTERACTIVE PAGE

SOLUTION — STEP-BY-STEP —

1 → 2 → 3 → 4 → 5

CALCULATE THE PER-UNIT IMPEDANCE OF ALL COMPONENTS

STEP 4 CALCULATE THE PER-UNIT IMPEDANCE OF EACH COMPONENT

VOLTAGE RATIO VS TRANSFORMER VOLTAGE RATIO

1 Important Note

The voltage ratio used in per-unit impedance conversion compares the old and new voltage bases **on the same side of the transformer.** It **is not** the ratio of the transformer's primary voltage to its secondary voltage.

2 Difference Between the Two Voltage Ratios

Transformer Voltage Ratio

$$a = \frac{V_{Primary}}{V_{Secondary}}$$

- Shows the actual voltage relationship between the primary and secondary windings.
- Used to determine how voltages are stepped up or down in the transformer.

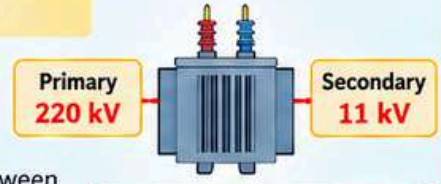

Transformer voltage ratio:

$$\frac{220}{11} = 20$$

Voltage Ratio in Per-Unit Impedance Conversion

$$Z_{pu,new} = Z_{pu,old}\left(\frac{MVA_{Base\ new}}{MVA_{Base\ old}}\right)\left(\frac{kV_{Base\ old}}{kV_{Base\ new}}\right)^2$$

- Compares the old and new voltage bases **on the same side of the transformer.**
- Not the ratio of primary voltage to secondary voltage.
- If the old and new voltage bases are the same, the voltage ratio = 1.

3 Example: Transformer T2 (Refer to previous slide)

A. Transformer voltage ratio (for information only)

Transformer T2 rating: 220 / 11 kV

Transformer voltage ratio: $a = \frac{220}{11} = 20$

B. Voltage ratio used in per-unit impedance conversion

Old voltage base (primary side) = 220 kV

New voltage base (primary side) = 220 kV

$$\frac{kV_{Base\ old}}{kV_{Base\ new}} = \frac{220}{220} = 1$$

Voltage ratio = 1 ***(not 20)***

INTERACTIVE PAGE

SOLUTION — STEP-BY-STEP —

1 → 2 → 3 → 4 → 5

STEP 5 DRAW THE EQUIVALENT PER-UNIT DIAGRAM WITH ALL THE IMPEDANCES VALUE.

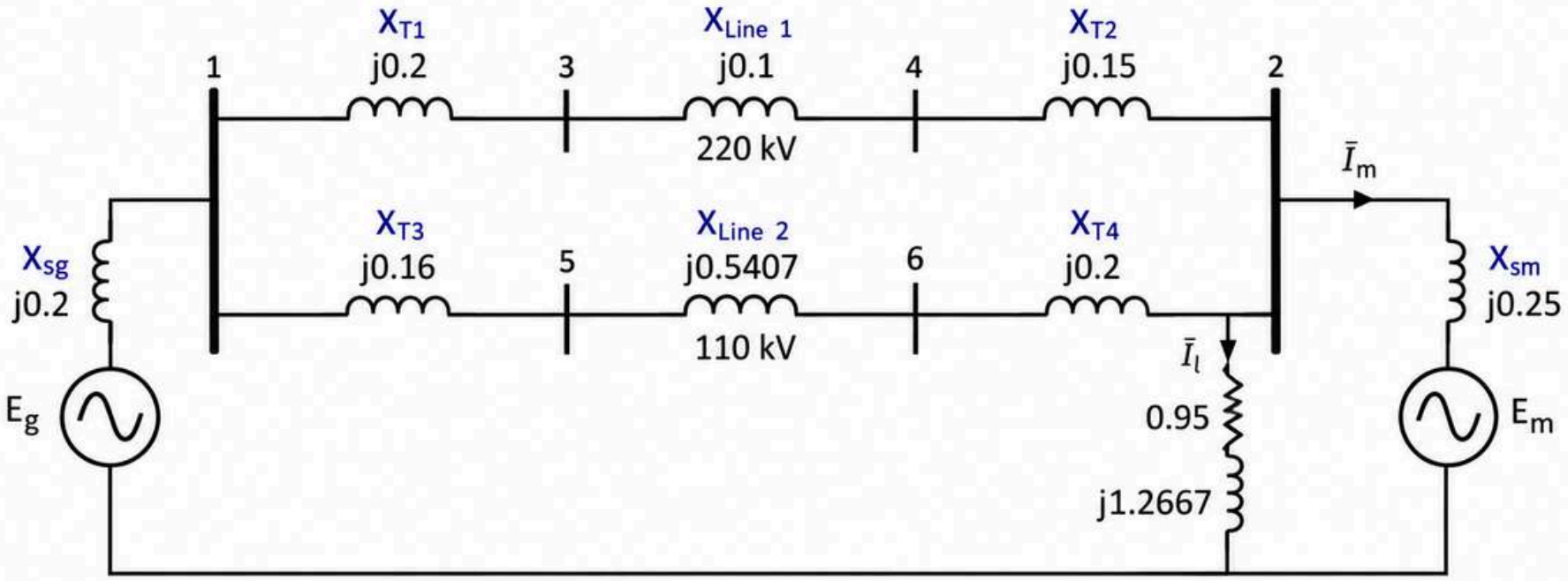

Figure E5.4(e): Per-unit impedance diagram

All impedances in the equivalent network are expressed in per-unit values using a common system base and the appropriate voltage bases.

PER-UNIT VALUE FORMULA IN SOLVING SHORT CIRCUIT FAULT CALCULATIONS



ANALYSE
CALCULATE
APPLY
SUCCEED

Symmetrical fault (Balanced fault)

- A symmetrical fault involves **all three phases** short-circuited to each other.
- It is the **most severe fault** but can be **easily calculated**.
- It is an **important type** of fault.
- The circuit breaker rated MVA breaking capacity is selected based on **three phase short circuit MVA**.

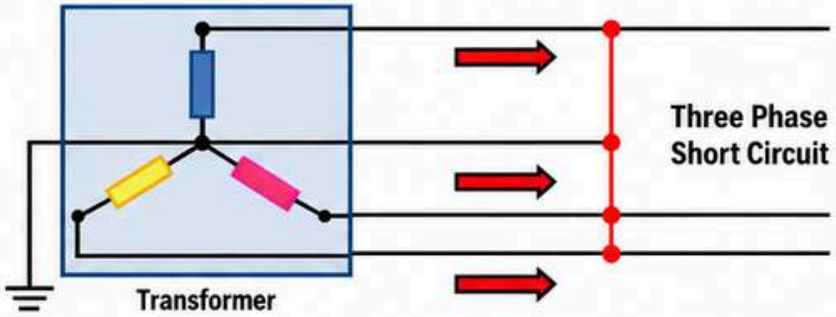

A fault involving all the three phases

The calculation of three-phase fault, assume the following conditions:

1 Synchronous machines

- Represented by a constant voltage source behind **subtransient reactance**.
- The EMF of all generators are 1 per unit making zero angle.

$V = 1 \angle 0°$



Generator model: 1 p.u. voltage behind subtransient reactance (X"d)

2 Transformers

- Represented by their **leakage reactance**.
- Winding resistances, shunt admittances and Δ-Y phase shifts are **neglected**.



Transformer model: leakage reactance only

3 Transmission lines

- The shunt capacitances of the transmission lines are **neglected**.

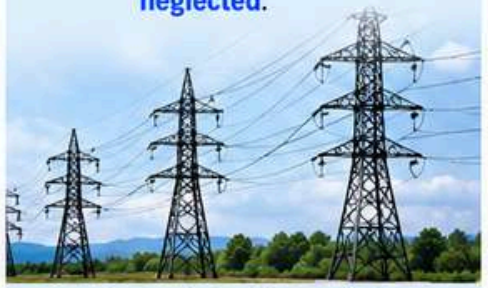

Transmission line model: series reactance only

4 System resistances

- The system resistances are **neglected** and only the inductive reactance of different elements are taken into account.

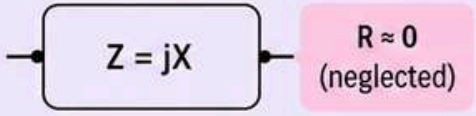

KEY TAKEAWAY

- Three-phase fault calculation uses per-unit values with simplified assumptions.
- Only reactances are considered (resistances and shunt capacitances are neglected).
- Generator voltage is $1 \angle 0°$ p.u. and transformers/lines are represented by their reactances only.

Simple Assumptions Reliable Results

TYPES OF ANALYSIS TO SOLVE THREE-PHASE FAULT CALCULATIONS

Power System Analysis for a Reliable Tomorrow

LEARN
ANALYSE
SOLVE
APPLY

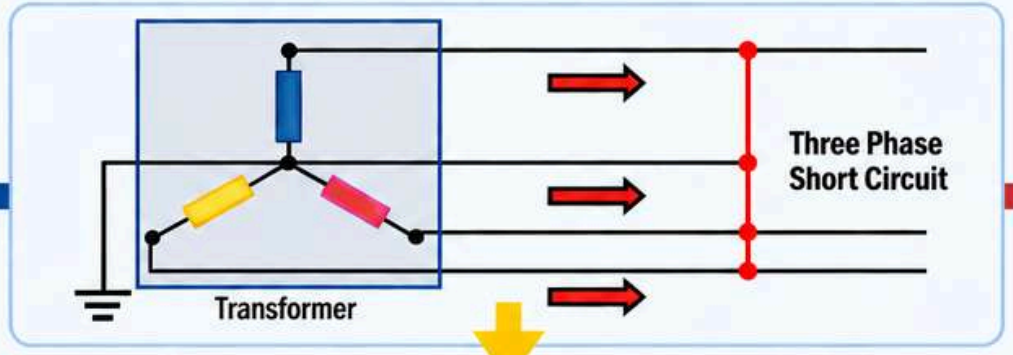

Type 1

- Simple circuits
- Load ignored
- Use Thevenin's Equivalent



Type 2

- Simple circuits
- Load not ignored
- Use Thevenin's Equivalent
- Find Pre-fault voltage



Type 3

- Large circuits
- Construct the Bus Impedance Matrix

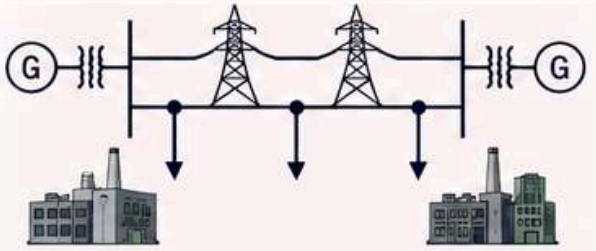

Different Approaches for Different Systems

Choose the appropriate type of analysis depending on the system configuration and available information.

Powering Knowledge for a Brighter Future

TYPE 1: SIMPLE CIRCUIT AND LOAD IGNORED

Three-phase fault calculations are **simplified** because **the system is symmetrical,** allowing only **one phase to be analysed.**

Example E5.5

A three phase fault occurs in the system as shown in **Figure E5.5(a).** Find the total fault current and the fault level.

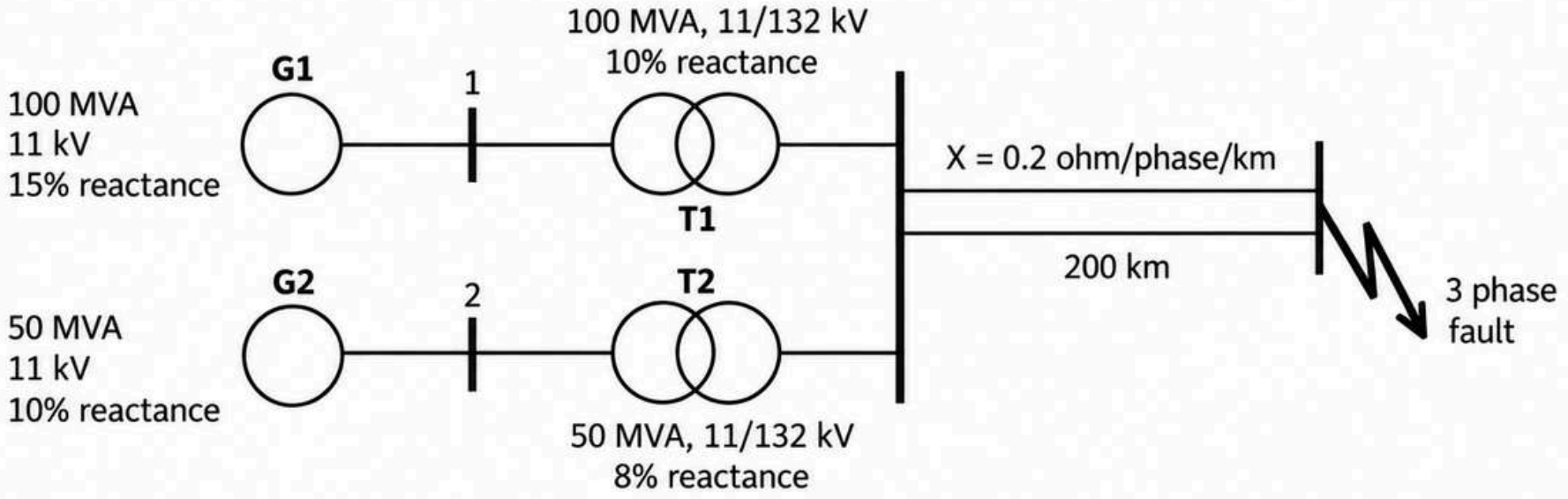

Figure E5.5(a): A three phase fault occurs in the system.

INTERACTIVE PAGE

INTERACTIVE NAVIGATION GUIDE

This interactive navigation guide helps you to easily access specific steps or components in the solution. Click on the buttons to jump to the corresponding page.

STEP NAVIGATION

CLICK ON A STEP NUMBER TO JUMP DIRECTLY TO THE CORRESPONDING SOLUTION PAGE.

1. **STEP 1:** DRAW THE EQUIVALENT PER-UNIT DIAGRAM
2. **STEP 2:** ASSUME A SYSTEM BASE
3. **STEP 3:** IDENTIFY THE VOLTAGE BASE, V_{Base}
4. **STEP 4:** CALCULATE THE PER-UNIT IMPEDANCE OF EACH COMPONENT
5. **STEP 5:** DRAW THE EQUIVALENT DIAGRAM WITH ALL THE IMPEDANCES VALUE
6. **STEP 6:** DETERMINE THE EQUIVALENT REACTANCE USING THEVENIN'S THEOREM
7. **STEP 7:** CALCULATE THE FAULT CURRENT IN PER UNIT
8. **STEP 8:** CONVERT THE PER UNIT VALUES TO ACTUAL VALUES TO CALCULATE THE FAULT MVA

COMPONENT NAVIGATION

CLICK ON A COMPONENT TO VIEW ITS CORRESPONDING PER-UNIT IMPEDANCE CALCULATION.

Example (Click to view)



Click on the component label (e.g. **COMPONENT 1**) to jump to the page of its corresponding per-unit impedance calculation.

RETURN TO MAIN SOLUTION

CLICK THE HOME ICON TO RETURN TO THE MAIN SOLUTION PAGE.

INTERACTIVE PAGE

SOLUTION

— STEP-BY-STEP —

1 → 2 → 3 → 4 → 5 → 6 → 7 → 8

STEP 1: DRAW THE EQUIVALENT PER-UNIT DIAGRAM.

RECALL STEP 1 OF THE SOLUTION TO **EXAMPLE E5.4**

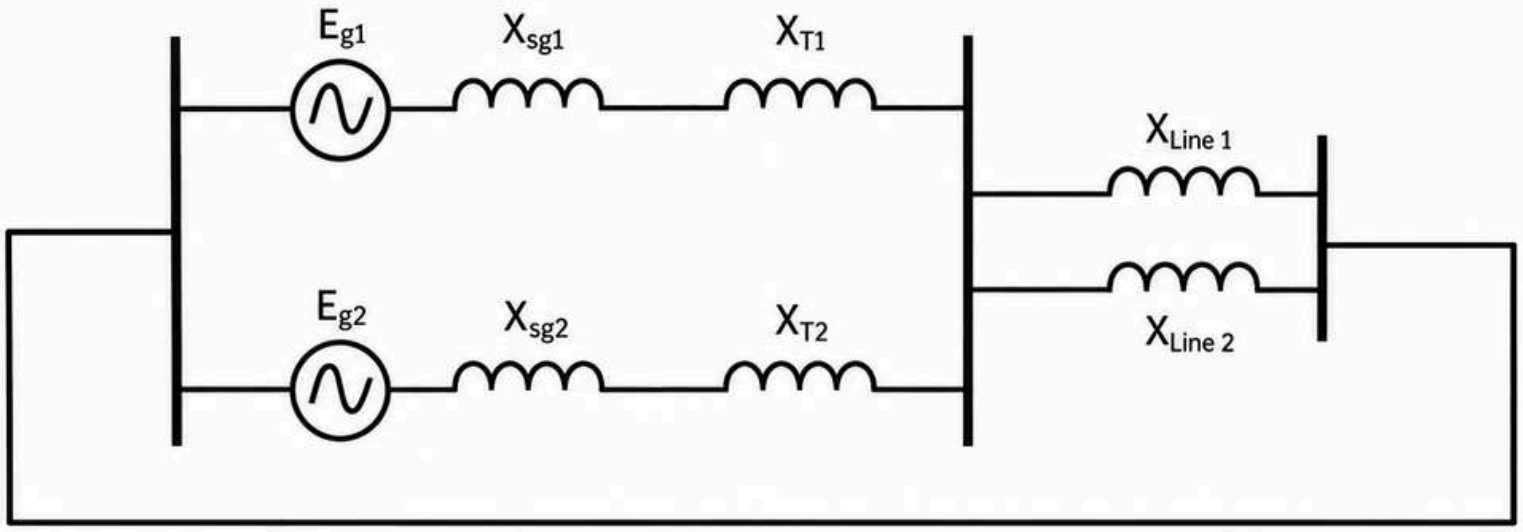

Figure E5.5(b): The equivalent per-unit impedance diagram.

INTERACTIVE PAGE

SOLUTION
— STEP-BY-STEP —

1 → 2 → 3 → 4 → 5 → 6 → 7 → 8

STEP 2 ASSUME A SYSTEM BASE

$$MVA_{Base} = 100\ MVA$$

The **base value** is chosen to make per-unit impedance calculations easier.

STEP 3. IDENTIFY THE VOLTAGE BASE, V_{Base}

RECALL STEP 3 OF THE SOLUTION TO **EXAMPLE E5.4**

The voltage base in the system is determined by the **transformer.**

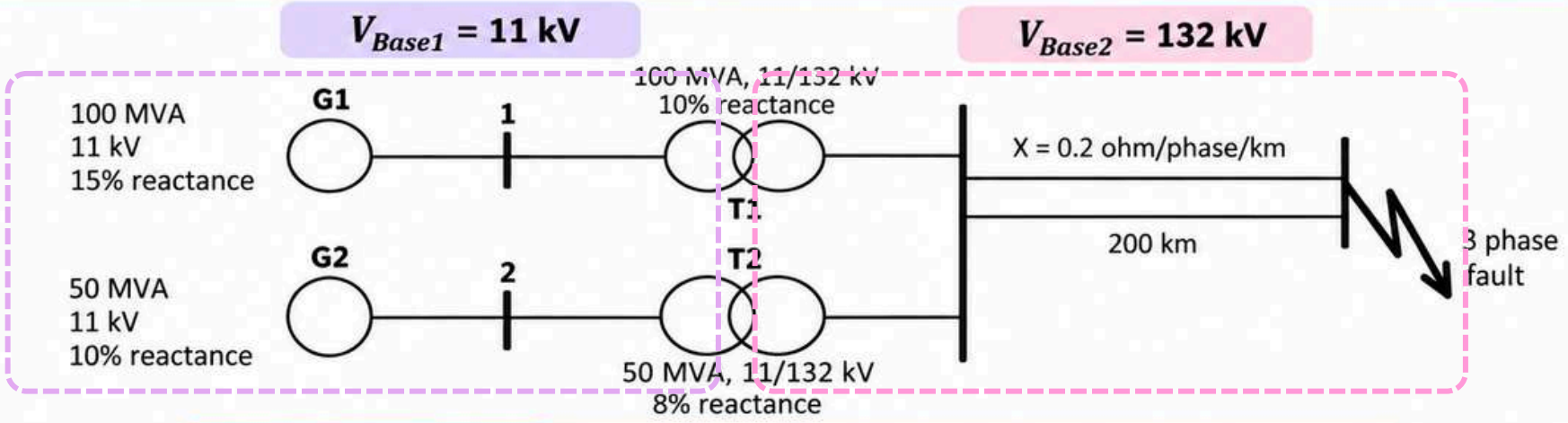

Figure E5.5(c): The appropriate voltage base is identified.

INTERACTIVE PAGE

SOLUTION
STEP-BY-STEP

1 → 2 → 3 → 4 → 5 → 6 → 7 → 8

STEP 4 CALCULATE THE PER-UNIT IMPEDANCE OF EACH COMPONENT

Calculate the per-unit impedance of each component in the **sequence indicated by the numbered labels** in the **Figure E5.5(d).**

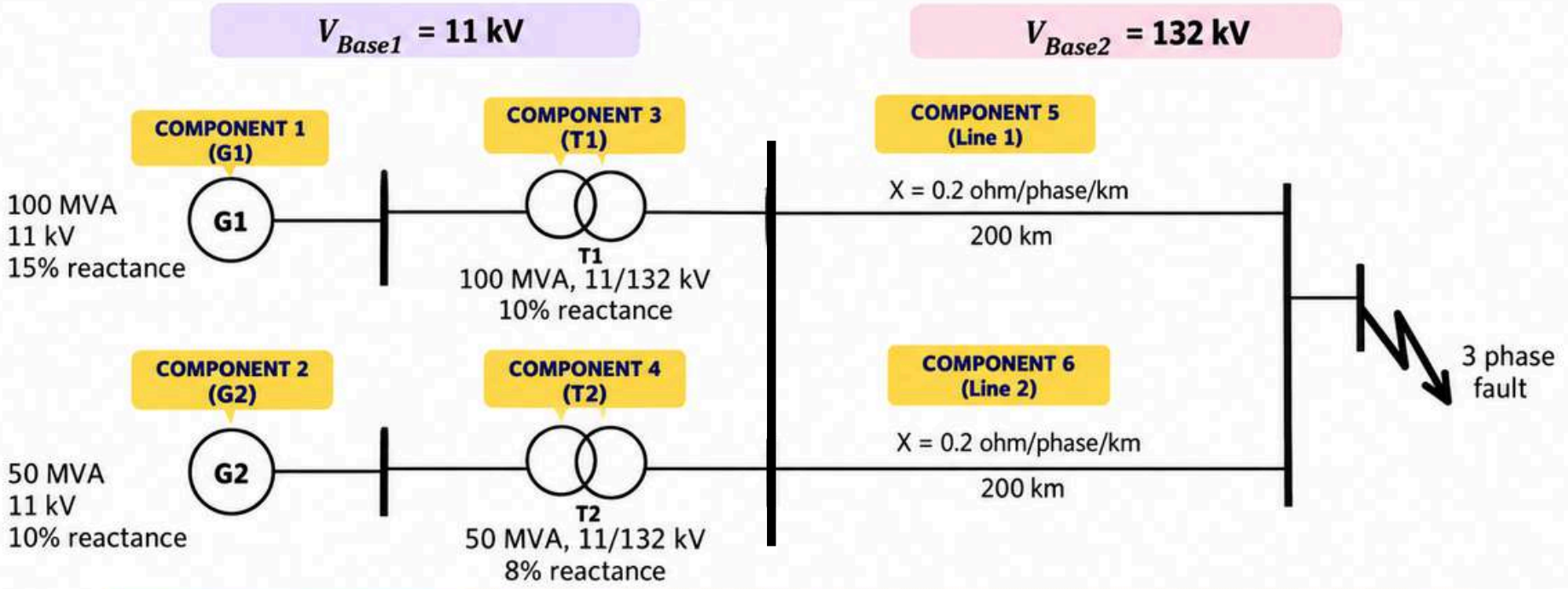

Figure E5.5(d): Power system with numbered components for per-unit impedance calculation.

BACK TO STEP 4

INTERACTIVE PAGE

SOLUTION
— STEP-BY-STEP —

1 → 2 → 3 → 4 → 5 → 6 → 7 → 8

STEP 4 CALCULATE THE PER-UNIT IMPEDANCE OF EACH COMPONENT

COMPONENT 1: GENERATOR, G1 (ROTATING MACHINE)

RECALL STEP 4 FOR **COMPONENT 1** OF THE SOLUTION TO **EXAMPLE E5.4**

1 **By using the formula:**

$$Z_{pu\ new} = Z_{pu\ old}\left(\frac{MVA_{Base\ new}}{MVA_{Base\ old}}\right) \text{x} \left(\frac{kV_{L\ Base\ old}}{kV_{L\ Base\ new}}\right)^2$$

2 **Given:**

$Z_{pu\ old} = 0.15\ pu$ | $MVA_{Base\ old} = 100$ MVA | $kV_{L\ Base\ old} = 11$ kV ***(Figure E5.5(a))***

$MVA_{Base\ new} = \mathbf{100\ MVA}$ | $kV_{L\ Base\ new} = V_{Base\ 1} = 11$ kV ***(Step 2)***

3 **Therefore,**

$$X_{pu\ G1} = 0.15\left(\frac{100}{100}\right)\left(\frac{11}{11}\right)^2 = \mathbf{0.15\ pu}$$

BACK TO STEP 4

INTERACTIVE PAGE

SOLUTION — STEP-BY-STEP —

1 → 2 → 3 → 4 → 5 → 6 → 7 → 8

STEP 4 CALCULATE THE PER-UNIT IMPEDANCE OF EACH COMPONENT

COMPONENT 2: GENERATOR, G2 (ROTATING MACHINE)

RECALL STEP 4 FOR **COMPONENT 1** OF THE SOLUTION TO **EXAMPLE E5.4**

1 **By using the formula:**

$$Z_{pu\ new} = Z_{pu\ old}\left(\frac{MVA_{Base\ new}}{MVA_{Base\ old}}\right) \text{x} \left(\frac{kV_{L\ Base\ old}}{kV_{L\ Base\ new}}\right)^2$$

2 **Given:**

$Z_{pu\ old} = 0.10\ pu$ | $MVA_{Base\ old} = 50$ MVA | $kV_{L\ Base\ old} = 11$ kV **(Figure E5.5(a))**

$MVA_{Base\ new} = \mathbf{100\ MVA}$ | $kV_{L\ Base\ new} = V_{Base\ 1} = 11$ kV **(Step 2)**

3 **Therefore,**

$$X_{pu\ G2} = 0.10\left(\frac{100}{50}\right)\left(\frac{11}{11}\right)^2 = \mathbf{0.20\ pu}$$

INTERACTIVE PAGE

SOLUTION — STEP-BY-STEP —

1 → 2 → 3 → **4** → 5 → 6 → 7 → 8

STEP 4 CALCULATE THE PER-UNIT IMPEDANCE OF EACH COMPONENT

COMPONENT 3: TRANSFORMER, T1

RECALL STEP 4 FOR **COMPONENT 2, COMPONENT 3, COMPONENT 6, COMPONENT 7** OF THE SOLUTION TO **EXAMPLE E5.4**

1 **By using the formula:**

$$Z_{pu\ new} = Z_{pu\ old}\left(\frac{MVA_{Base\ new}}{MVA_{Base\ old}}\right) \text{x} \left(\frac{kV_{L\ Base\ old}}{kV_{L\ Base\ new}}\right)^2$$

2 **Given:**

$Z_{pu\ old} = 0.10\ pu$ | $MVA_{Base\ old} = 100$ MVA | $kV_{L\ Base\ old} = 11$ kV ***(Figure E5.5(a))***

$MVA_{Base\ new} = \mathbf{100\ MVA}$ | $kV_{L\ Base\ new} = V_{Base\ 1} = 11$ kV ***(Step 2)***

3 **Therefore,**

$$X_{pu\ T1} = 0.10\left(\frac{100}{100}\right)\left(\frac{11}{11}\right)^2 = \mathbf{0.1\ pu}$$

BACK TO STEP 4

INTERACTIVE PAGE

SOLUTION — STEP-BY-STEP —

1 → 2 → 3 → **4** → 5 → 6 → 7 → 8

STEP 4 CALCULATE THE PER-UNIT IMPEDANCE OF EACH COMPONENT

COMPONENT 4: TRANSFORMER, T2

RECALL STEP 4 FOR **COMPONENT 2, COMPONENT 3, COMPONENT 6, COMPONENT 7** OF THE SOLUTION TO **EXAMPLE E5.4**

1 **By using the formula:**

$$Z_{pu\ new} = Z_{pu\ old}\left(\frac{MVA_{Base\ new}}{MVA_{Base\ old}}\right) \text{x} \left(\frac{kV_{L\ Base\ old}}{kV_{L\ Base\ new}}\right)^2$$

2 **Given:**

$Z_{pu\ old} = 0.08\ pu$ | $MVA_{Base\ old} = 50$ MVA | $kV_{L\ Base\ old} = 11$ kV ***(Figure E5.5(a))***

$MVA_{Base\ new} = \mathbf{100\ MVA}$ | $kV_{L\ Base\ new} = V_{Base\ 1} = 11$ kV ***(Step 3)***

3 **Therefore,**

$$X_{pu\ T2} = 0.08\left(\frac{100}{50}\right)\left(\frac{11}{11}\right)^2 = \boxed{\mathbf{0.16\ pu}}$$

BACK TO STEP 4

INTERACTIVE PAGE

SOLUTION — STEP-BY-STEP —

1 → 2 → 3 → **4** → 5 → 6 → 7 → 8

STEP 4 CALCULATE THE PER-UNIT IMPEDANCE OF EACH COMPONENT

COMPONENT 5: TRANSMISSION LINE, LINE 1

RECALL STEP 4 FOR **COMPONENT 4 AND COMPONENT 5** OF THE SOLUTION TO **EXAMPLE E5.4**

1 By using the formula:

$$Z_{Base} = \frac{(kV_{L\,Base})^2}{MVA_{Base}}$$

2 Given (actual line impedance):

$X_{Line} = 0.2\ \frac{ohm}{phase}/km$ | $Distance\ phase = 200\ km$

Therefore,

$$Z_{actual\ Line\ 1} = 0.2 \times 200 = 40\ \Omega$$

3 Given (base impedance):

$MVA_{Base} = 100\ \text{MVA}$ | $kV_{L\,Base\ Line} = V_{Base\ 2} = 132\ kV$ ***(Step 2)***

Therefore,

$$Z_{Base\ Line\ 1} = \frac{(kV_{L\,Base\ line})^2}{MVA_{Base}} = \frac{(132k)^2}{100M} = 174.24\ \Omega$$

4 Hence,

$Z_{actual\ Line\ 1} = 40\ \Omega$ | $Z_{Base\ Line\ 1} = 174.24\ \Omega$

$$X_{pu\ Line\ 1} = \frac{Z_{actual\ Line}}{Z_{Base\ Line}} = \frac{40}{174.24} = 0.2296\ pu$$

0.2296 pu

BACK TO STEP 4

INTERACTIVE PAGE

SOLUTION — STEP-BY-STEP —

1 → 2 → 3 → **4** → 5 → 6 → 7 → 8

STEP 4 CALCULATE THE PER-UNIT IMPEDANCE OF EACH COMPONENT

COMPONENT 6: TRANSMISSION LINE, LINE 2

RECALL STEP 4 FOR **COMPONENT 4 AND COMPONENT 5** OF THE SOLUTION TO **EXAMPLE E5.4**

1 By using the formula:

$$Z_{Base} = \frac{(kV_{L\ Base})^2}{MVA_{Base}}$$

2 Given (actual line impedance):

$X_{Line} = 0.2\ \frac{ohm}{phase}/km$ | $Distance\ phase = 200\ km$

Therefore,

$$Z_{actual\ Line\ 2} = 0.2 \times 200 = 40\ \Omega$$

3 Given (base impedance):

$MVA_{Base} = 100$ MVA | $kV_{L\ Base\ Line} = V_{Base\ 2} = 132\ kV$ ***(Step 2)***

Therefore,

$$Z_{Base\ Line\ 2} = \frac{(kV_{L\ Base\ line})^2}{MVA_{Base}} = \frac{(132k)^2}{100M} = 174.24\ \Omega$$

4 Hence,

$Z_{actual\ Line\ 2} = 40\ \Omega$ | $Z_{Base\ Line\ 2} = 174.24\ \Omega$

$$X_{pu\ Line\ 2} = \frac{Z_{actual\ Line}}{Z_{Base\ Line}} = \frac{40}{174.24} = 0.2296\ pu$$

0.2296 pu

BACK TO STEP 4

STEP 5: DRAW A SINGLE LINE REACTANCE DIAGRAM.

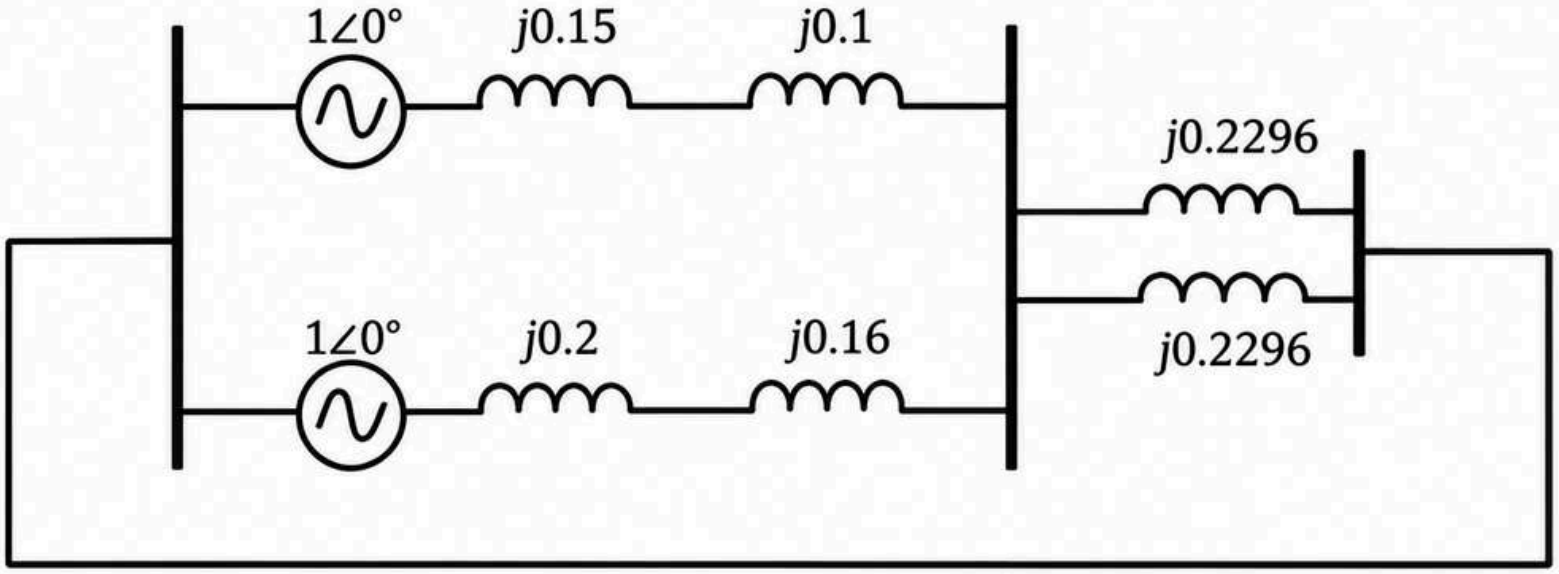

Figure E5.5(d): A single line reactance diagram showing one phase and neutral.

INTERACTIVE PAGE

SOLUTION — STEP-BY-STEP —

1 → 2 → 3 → 4 → 5 → 6 → 7 → 8

STEP 6: DETERMINE THE EQUIVALENT REACTANCE USING THEVENIN'S THEOREM

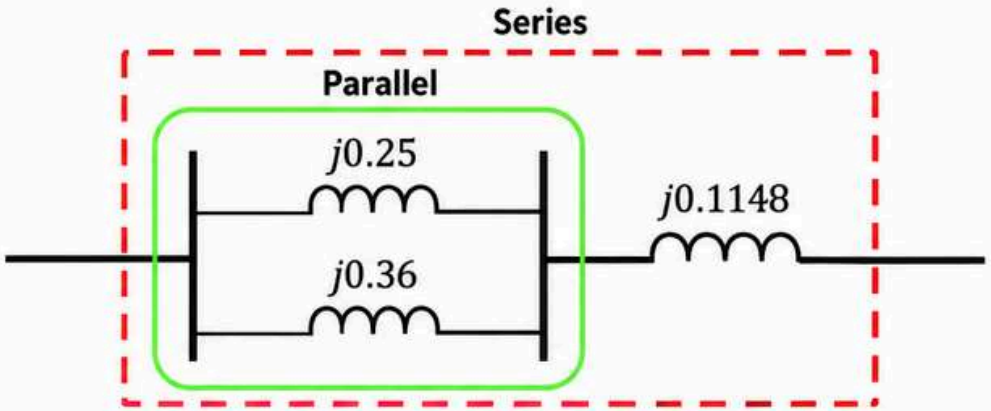

Figure E5.5(e): The system seen from the fault side.

$$X_{Total} = \frac{j0.25 \; x \; j0.36}{j0.25 + j0.36} + j0.1148$$

$$X_{Total} = j0.1475 + j0.1148 = \boxed{j0.2623}$$

Steps for Solving Thevenin's Theorem

Step 1 – Open circuit at the fault point.

Step 2 – Replace all the sources by their internal resistance.

Step 3 – If sources are ideal then short circuit the voltage source and open circuit the current source.

Step 4 – Find the equivalent reactance at the fault point.

Step 5 – Draw the Thevenin's equivalent circuit.

INTERACTIVE PAGE

SOLUTION
— STEP-BY-STEP —

1 → 2 → 3 → 4 → 5 → 6 → 7 → 8

STEP 7: CALCULATE THE FAULT CURRENT IN PER UNIT.

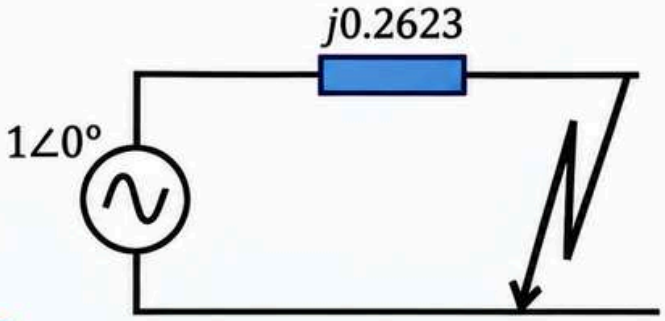

Figure E5.5(f): The simplified equivalent per-unit impedance diagram.

Recall solution of Example 5.2 for Step 3

Therefore,

$$Fault\ current,\ I_{F\,pu} = \frac{V_{pu}}{Z_{pu}} = \frac{1\angle 0°}{j0.2623} = \mathbf{-j3.8124\ pu}$$

IMPORTANT NOTE

The negative imaginary sign $(-j)$ indicates that the fault current lags the reference voltage by 90° due to inductive reactance. It ***does not*** indicate unbalanced three-phase currents.

INTERACTIVE PAGE

SOLUTION
— STEP-BY-STEP —

1 → 2 → 3 → 4 → 5 → 6 → 7 → 8

STEP 8: CONVERT THE PER UNIT VALUES TO ACTUAL VALUES TO CALCULATE THE FAULT MVA.

1. Base current calculation (from Example 5.2 – Step 4)

Therefore,

$$Base\ current,\ I_{Base} = \frac{MVA_{Base}}{\sqrt{3}kV_{L\ Base}} = \frac{100M}{\sqrt{3} \times 132k} = 437.39\ A$$

2. Fault current in per unit (from Step 7)

Given:

$$Fault\ current,\ I_{F\ pu} = -j3.8124\ pu\ \ (\textbf{Step 7})$$

3. Actual fault current calculation

Hence,

$$Actual\ current,\ I_{F\ actual} = Fault\ current,\ I_{F\ pu} \times Base\ current,\ I_{Base}$$
$$= -j3.8124 \times 437.39 = -j1667.51 = 1667.51\angle -90°\ A$$

4. Fault MVA calculation (from Example 5.2 – Step 6)

Therefore,

$$MVA_{fault} = \sqrt{3} \times I_{F\ actual} \times kV_L = \sqrt{3} \times 1667.51 \times 132k = 381.24\ \textbf{MVA}$$

INTERACTIVE PAGE

PROBLEMS P5.2

Solve the following problems.

(a) A power network is shown in **Figure P5.2(a)**. Draw the per-unit impedance diagram and calculate the per-unit impedance of each component.

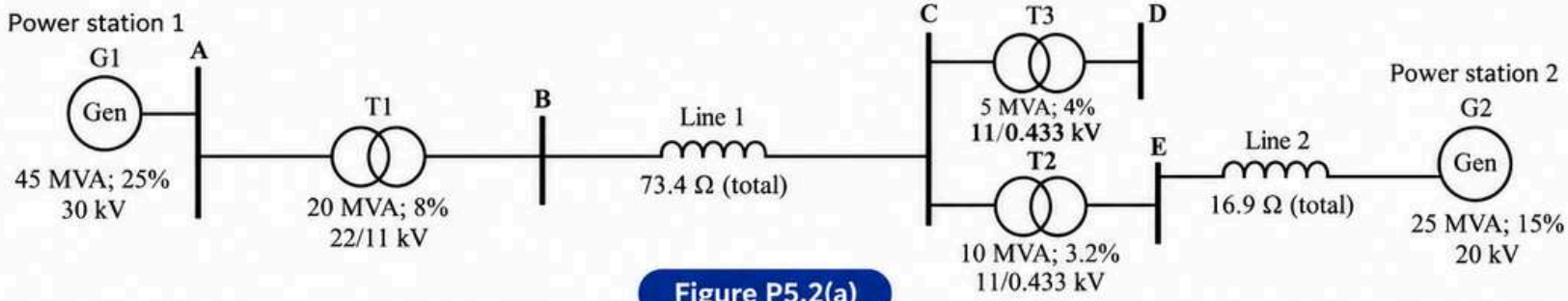

Figure P5.2(a)

(b) A **three-phase fault** occurs in the system, as shown in **Figure P5.2(b)**. Calculate the total fault current and the fault level.

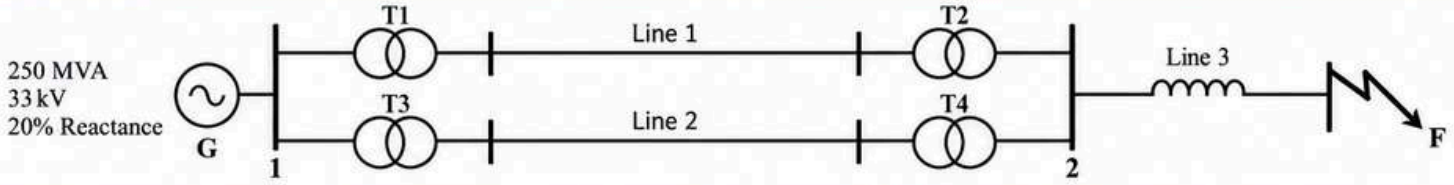

Transformer	MVA	Voltage Ratio	Reactance
T1	50 MVA	33/220 kV	15% Reactance
T2	40 MVA	220/22 kV	7% Reactance
T3	40 MVA	33/110 kV	9.5% Reactance
T4	50 MVA	110/22 kV	3.9% Reactance

Transmission Line	Total Impedance
Line 1	123 Ω
Line 2	456 Ω
Line 3	78 Ω

Figure P5.2(b)

Try It Yourself First, Then Check the Solution!

SOLUTION



RECAP QUIZ

Topic 5: Fault Calculation

Assess your engineering proficiency on power system fault analysis, symmetrical and asymmetrical fault characteristics, the per-unit system, and short-circuit calculation assumptions.

10 Questions
1 question per page format

Next & Back
Skip and jump to any question

Instant Score
Detailed solution explanations

Start RECAP QUIZ →

CLICK HERE!

Scan Me!

REFERENCES

asedabo_. (n.d.). Desk fan – Vintage design [3D model]. Sketchfab. https://skfb.ly/oyLJL

Asset Management Department, Tenaga Nasional Berhad. (2014). TNB distribution engineering fundamentals. Tenaga Nasional Berhad.

b4_cobra. (n.d.). high_voltage_power_transformer [3D model]. Sketchfab.

Bimfra. (n.d.). Substation_Bimfra [3D model]. Sketchfab. https://skfb.ly/6SXIv

Bird, J. (2021). Bird's electrical circuit theory and technology. CRC Press.

Electrology. (2025, February 21). Understanding power system faults: A deep dive [Video]. YouTube. https://www.youtube.com/watch?v=YfzjYNoVY2I

Electrology. (2025, September 7). The shocking truth about underground cables you need to know NOW [Video]. YouTube. https://www.youtube.com/watch?v=jpjdDG23y9U

Electrology. (2025, October 22). Why direct laying might be the BEST method for underground cables [Video]. YouTube. https://www.youtube.com/watch?v=imnKDh4eusY

ENGIE Belgium. (2025, May 15). How does a nuclear power plant work? [Video]. YouTube. https://www.youtube.com/watch?v=7rlEILcI-vk

Eric Explains. (2026, June 28). Every type of electrical fault explained [Video]. YouTube. https://www.youtube.com/watch?v=ruE5rhsuXzo

Eric Explains. (2026, August 11). Every type of grounding and earthing system explained [Video]. YouTube. https://www.youtube.com/watch?v=tQR8TcB77dM

GGHH Animations. (2025, March 23). How a power transformer works | Animated breakdown [Video]. YouTube. https://www.youtube.com/watch?v=EYP7QPmcwso

Harun, N., & Ahmad Fuad, N. F. (2020). A quick guide power system. Politeknik Tun Syed Nasir Syed Ismail.

MrdT. (n.d.). 低压配电箱 – Low-voltage distribution box（0.4kV） [3D model]. Sketchfab. https://skfb.ly/oKOxA

saVRee. (2026, September 19). How thermal power plants work? | Complete walkthrough [Video]. YouTube. https://www.youtube.com/watch?v=KI1LaBtpRIg

Sustainable Energy Development Authority Malaysia. (n.d.). *Sustainable Energy Development Authority (SEDA) Malaysia*. Retrieved September 28, 2026, from Sustainable Energy Development Authority(SEDA) Malaysia. (2019). SEDA Malaysia. https://www.seda.gov.my/

The Engineering Mindset. (2024, June 12). How 3 phase transformers work – Why we need them [Video]. YouTube. https://www.youtube.com/watch?v=u0SsejDCVkU

The Engineering Mindset. (2026, September 15). How 3 phase power works: Why 3 phases? [Video]. YouTube. https://www.youtube.com/watch?v=EElZjxhQxHs

VisiCore Science. (2026, July 25). This dam turns falling water into electricity! [Video]. YouTube. https://www.youtube.com/watch?v=DVTQJSz10U

POLITEKNIK
MALAYSIA
TUN SYED NASIR

eISBN 978-967-2736-54-7

